31 Volunteer Drive
Hendersonville, TN 37075 USA
Telephone: 615.824.3634
Fax: 615.264.5222
Email: dynatec@itwdynatec.com
Web: www.itwdynatec.com

ITW Dynatec
The Next Level of Technology

■ innovation ■ service ■ reliability

STEP-DOWN TRANSFORMER GROUPS, 400/480VAC SERVICE MANUAL

PN 115308	Xfmr Group, 2H, 480, DMS
PN 115310	Xfmr Group, 2H, 400, DMS
PN 115312	Xfmr Group, 4H, 480, DMS
PN 115314	Xfmr Group, 4H, 400, DMS
PN 115316	Xfmr Group, 6H, 480, DMS
PN 115318	Xfmr Group, 6H, 400, DMS
PN 115387	Xfmr Group, 480V, N26/C22
PN 115389	Xfmr Group, 400V, N26/C22
PN 115391	Xfmr Group, 480V, N22
PN 115393	Xfmr Group, 400V, N22

IMPORTANT ! - READ ALL INSTRUCTIONS BEFORE OPERATING THIS EQUIPMENT

It is the customer's responsibility to have all operators and service personnel read and understand this information. Contact your ITW Dynatec customer service representative for additional copies.

NOTICE! Please be sure to include the serial number of your application system each time you order replacement parts and/or supplies. This will enable us to send you the correct items that you need.

ITW Dynatec Service Parts Direct Dial: 1-800-538-9540
ITW Dynatec Technical Service Direct Dial: 1-800-654-6711

TABLE OF CONTENTS

Chapter - Page #

Chapter 1 Safety Precautions

Chapter 2 Description & Installation

Description 2-1
Transformer Sizing 2-2
Specifications 2-3
Dimensionals 2-4
Mounting 2-7
Installation 2-7
Wattage Chart 2-8

Chapter 3 Service

Fuse Replacement 3-1
Transformer Replacement 3-1
Recommended Spare Parts List 3-2

Chapter 4 Engineering Drawings

PN 115308 Transformer Group, 2H, 480VAC
PN 115305 Grid Group, DMS22/45, 480VAC, Dynamelt S
PN 115332 Base, DMS22/45, Dynamelt S
PN 115309 Wiring Diagram, 2H w. Grid, 480VAC, Dynamelt S
PN 115311 Wiring Diagram, 2H w. Grid, 400VAC, Dynamelt S
PN 115313 Wiring Diagram, 4H w. Grid, 480VAC, Dynamelt S
PN 115315 Wiring Diagram, 4H w. Grid, 400VAC, Dynamelt S
PN 115317 Wiring Diagram, 6H w. Grid, 480VAC, Dynamelt S
PN 115319 Wiring Diagram, 6H w. Grid, 400VAC, Dynamelt S
PN 115404 Front Panel Assembly, 480VAC, N22
PN 115392 Wiring Diagram, 2H w. Grid, 480VAC, N22
PN 115394 Wiring Diagram, 2H w. Grid, 400VAC, N22
PN 115405 Front Panel Assembly, 480VAC, C22/ N26
PN 115388 Wiring Diagram, 6H w. Grid, 480VAC, C22/ N26
PN 115390 Wiring Diagram, 6H w. Grid, 400VAC, C22/ N26

Chapter 1
SAFETY PRECAUTIONS

All operators and service personnel must read and understand this manual before operating or servicing equipment.

All maintenance and service on this equipment must be performed by trained technicians.

Electrical

Dangerous voltages exist at several points in this equipment. To avoid personal injury, do not touch exposed connections and components while input power is on. Disconnect, lockout and tag external electrical power before removing protective panels.

A secure connection to a reliable earth ground is essential for safe operation.

A disconnect switch with lockout capability must be provided in the line ahead of the unit. Wiring used to supply electrical power should be installed by a qualified electrician.

High Temperatures

Severe burns can occur if unprotected skin comes in contact with molten adhesive or hot application system parts.

Safety glasses, gloves and long- sleeved clothing must be worn whenever working with or around adhesive application systems.

High Pressure

To avoid personal injury, do not operate the equipment without all covers, panels and safety guards properly installed.

To prevent serious injury from molten adhesive under pressure when servicing the equipment, disengage the pumps and relieve the adhesive system's hydraulic pressure (e.g., trigger the heads, hand-held applicators, and/or other application devices into a waste container) before opening any hydraulic fittings or connections.

IMPORTANT NOTE: Even when a system's pressure gauge reads "0" psig, residual pressure and trapped air can remain within it causing hot adhesive and pressure to escape without warning when a filter cap or a hose or hydraulic connection is loosened or removed. For this reason, always wear eye protection and protective clothing.

Either of the two High Pressure symbols shown may be used on ITW Dynatec equipment.

Protective Covers

Keep all guards in place!

To avoid personal injury, do not operate the application system without all covers, panels and safety guards properly installed.

Eye Protection & Protective Clothing

It is very important that you PROTECT YOUR EYES when working around hot melt adhesive equipment!

Wear safety glasses with side shields which conform to ANSI Z87.1 or EN166.

Failure to wear safety glasses could result in severe eye injury.

It is important to protect yourself from potential burns when working around hot melt adhesive equipment.

Wear protective gloves and long-sleeved, protective clothing to prevent burns that could result from contact with hot material or hot components.

Always wear steel-reinforced safety shoes.

Safe Installation and Operation

To avoid possible failure of hoses, make sure all hoses are routed to avoid kinking, tight radius turns (8” or less) and abrasive contact. Hot-melt hoses should not have prolonged contact with heat-absorbing surfaces such as cold floors or metal troughs. These heat-absorbing surfaces can alter adhesive flow and cause incorrect calibration. Hoses should never be covered with materials that prevent heat dissipation, such as insulation or sheathing.

Read this manual before applying electrical power to the equipment. Equipment may be damaged by incorrect electrical connections.

Do not use adhesive that is dirty or that may be chemically contaminated. Doing so can cause system clogging and pump damage.

When adhesive hand-held applicators or other movable applicators are used, never point them at yourself or at any other person. Never leave a hand-held applicator’s trigger unlocked when not actually in use.

Do not operate the hopper or other system components without adhesive for more than 15 minutes if the temperature is 150 degrees C (300 degrees F) or more. To do so will cause charring of the residual adhesive.

Never activate the heads, hand-held applicators and/ or other application devices until the adhesive’s temperature is within the operating range. Severe damage could result to internal parts and seals.

Treatment for Burns From Hot Melt Adhesives

Burns caused by hot melt adhesive must be treated at a burn center.

Care should be used when working with hot melt adhesives in the molten state. Because they rapidly solidify, they present a unique hazard.
Even when first solidified, they are still hot and can cause severe burns. When working near a hot melt application system, always wear safety gloves, safety glasses and long-sleeved, protective clothing.

Always have first-aid information and supplies available.

Call a physician and/or an emergency medical technician immediately.

Service

Refer all servicing to qualified personnel only.

Explosion/ Fire Hazard

Never operate this unit in an explosive environment.

Use cleaning compounds recommended by ITW Dynatec or your adhesive supplier only. Flash points of cleaning compounds vary according to their composition, so consult with your supplier to determine the maximum heating temperatures and safety precautions.

Lockout/ Tagout

Follow OSHA 1910.147 (Lockout/ Tagout Regulation) for equipment's lockout procedures and other important lockout/ tagout guidelines.

Be familiar with all lockout sources on the equipment.

Even after the equipment has been locked out, there may be stored energy in the application system, particularly in the capacitors within the panel box. To ensure that all stored energy is relieved, wait at least one minute before servicing electrical capacitors.

Use of PUR (Polyurethane) Adhesives

PUR adhesives emit fumes (MDI and TDI) that can be dangerous to anyone exposed to them. These fumes cannot be detected by the sense of smell. ITW Dynatec strongly recommends that an exhaust hood or system be installed over any PUR system.

Consult with your adhesive manufacturer for specifics about required ventilation.

CAUTION: Because of the nature of PUR adhesives to strongly bond in the presence of moisture, care must be taken to prevent them from curing inside Dynatec equipment. If PUR adhesive solidifies in a unit, the unit must be replaced. Always purge old PUR adhesive from the system per your adhesive manufacturer's instructions and timeĆ table. ALLOWING PUR ADHESIVE TO CURE IN A UNIT VOIDS ITW DYNATEC'S WARRANTY.

In This Manual

WARNINGS and CAUTIONS are found throughout this manual.

WARNINGS mean that failure to observe the specific instructions may cause injury to personnel.

CAUTIONS mean that failure to observe the specific instructions may damage the equipment.

Chapter 2
DESCRIPTION, SPECIFICATIONS AND INSTALLATION

Description

ITW Dynatec's 400/ 480VAC transformer groups step down incoming 400VAC or 480VAC 3-phase delta electrical service so that a Dynamelt S (DMS), C22, N22 or N26 ASU (adhesive supply unit) can operate at 240VAC. This voltage powers the ASU electronics, the AC pump/ motor and drive, and all head and hose temperature zones.

The incoming 400VAC or 480VAC service is routed through a 3-pole, 25A, 480VAC circuit breaker switch and into a transformer set. Incoming power is split off inside the transformer set. 400/480VAC is routed back to the ASU through a fuse block into a DC-controlled solid state relay and is used to power the ASU's hopper elements. 400/480VAC power is also routed to a bank of 1.8KVA transformers. The 240VAC transformer output power is routed through fuse blocks and into the mains connector on the ASU power board.

The Dynatec step-down transformer groups are intended for either 400VAC 3-phase delta connection without neutral or 480VAC 3-phase delta connection without neutral. They should not be used in wash-down environments or in explosive atmospheres.

Transformer Sizing

The step-down transformer groups are available in 2 hose/ head, 4 hose/ head, and 6 hose/ head configurations. Each hose/ head pair is powered by one transformer. Each transformer is sized to deliver a total of 1800W to a pair of two heads and two hoses.

The first transformer provides 1800W to hose and head temperature zones 1 and 2. A second transformer provides 1800W to hose and head zones 3 and 4. If a third transformer is needed, it provides 1800W to hose and head zones 5 and 6.

Example 1:

Hose 1: a #6, 24ft Dynaflex hose	= 672W
Head 1: a single-port BF head	= 220W
Hose 2: a #6, 24ft Dynaflex Hose	= 672W
Head 2: a single-port BF head	= 220W
Total Wattage	= 1784W

Since total wattage is less than 1800W, the combination above can be powered with one transformer.

Example 2:

Hose 1: a #6, 24ft Dynaflex hose	= 672W
Head 1: a six-port BF head	= 775W
Hose 2: a #6, 24ft Dynaflex hose	= 672W
Head 2: a six-port BF head	= 775W
Total Wattage	= 2894W

Since total wattage exceeds 1800W, the combination above would require two transformers. Each transformer would supply 1447W required to power one hose and one head.

If Total Wattage exceeds 3600W, a third transformer is required.

Specifications

Environmental:

Storage/ shipping temperature . . . . . -40° C to 70°C (-40° F to 158°F)
Ambient service temperature . . . . . -7° C to 50°C (20° F to 122°F)

Physical:

Dimensions . . . . . see dimensional layouts on following pages
Number of heads/ hoses . . . . . 2, 4 or 6
Weight:
  2-hose system . . . . . 50 lb.
  4-hose system . . . . . 75 lb.
  6-hose system . . . . . 100 lb.

Electrical:

ASU* circuit breaker . . . . . 480 VAC/ 3p (277V per pole)/ 25 Amp
Transformer . . . . . 1.8KVA isolated transformer
  Primary taps 480/400/common
  Secondary taps 240/common
UL class . . . . . 180C insulation
  Rated for . . . . . 100% duty cycle
Operation . . . . . 50 or 60 Hz
Total wattage capacity:
  2-hose system 1800w
  4-hose system 3600w
  6-hose system 5400w
Hopper wattage:
  DMS05 & DMS10 ASUs . . . . . 1500w operating @ 400/480VAC
  DMS22, DMS45, N22, N26 & C22 ASUs . . . . . 2500w operating @ 400/480VAC
Pre-melt grid wattage:
  DMS22, DMS45, N22 & C22 ASUs only . . . . . 2500w operating @ 400/480VAC
Fuses:
  2-hose system . . . . . Four 10A, 600VAC LPCC fuses
  4-hose system . . . . . Six 10A, 600VAC LPCC fuses
  6-hose system . . . . . Eight 10A, 600VAC LPCC fuses
  Pre-melt grid . . . . . Two 10A, 600VAC LPCC fuses

** Adhesive Supply Unit (melter)*

Dimensionals

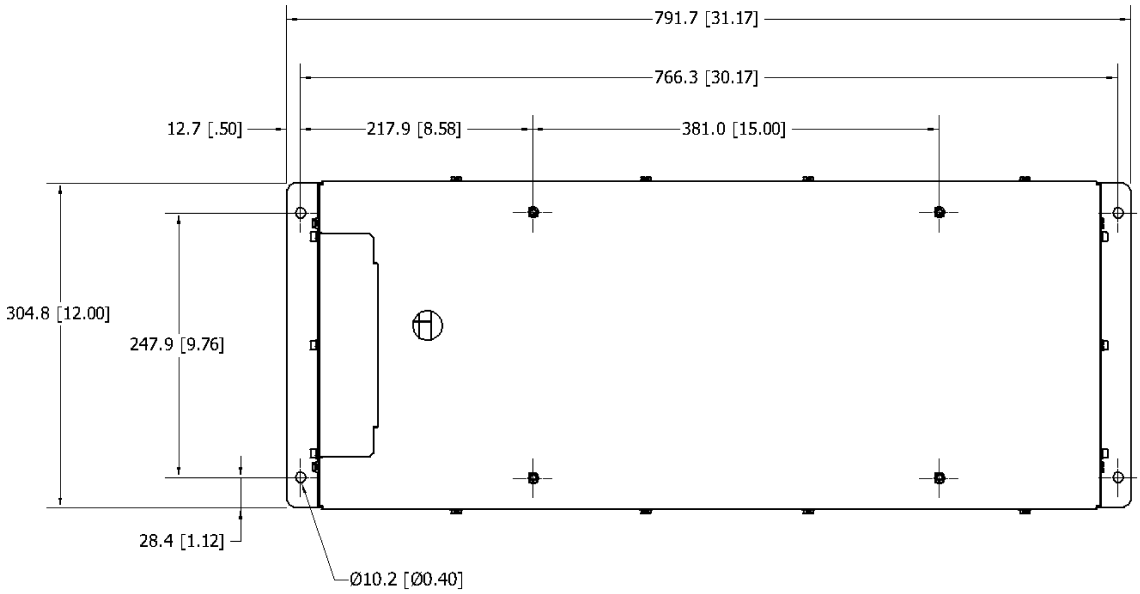

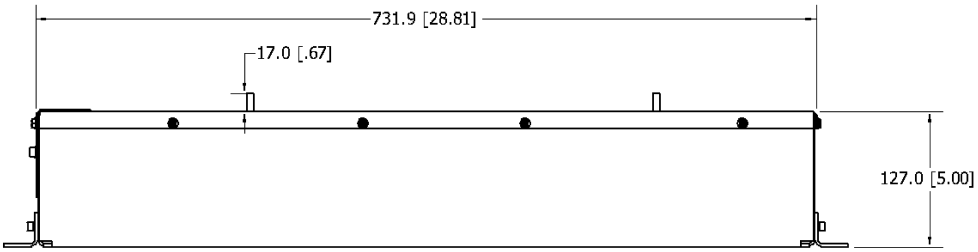

Transformer Case Assembly

Dimensionals

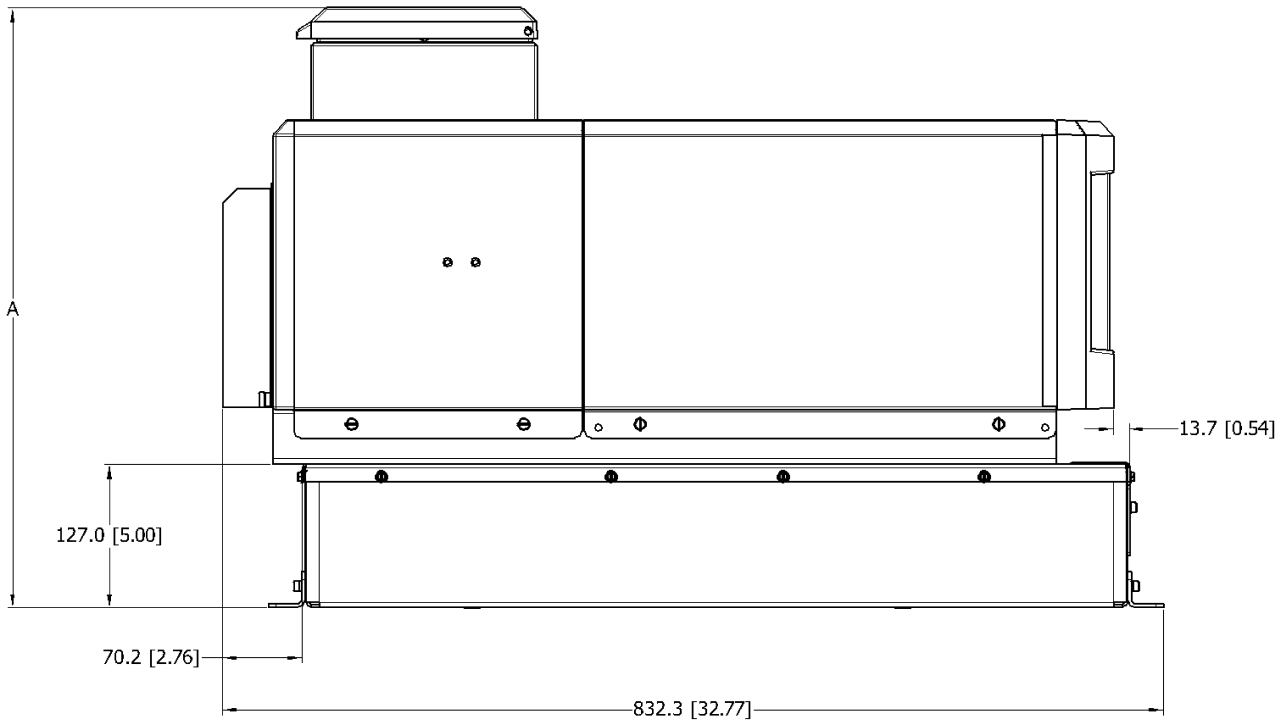

DIMENSION	A
DMS 05mm [inch] DMS 10mm [inch]	546.1 [21.5] 736.6 [29.0]

Dynamelt S 05 or 10 ASU on Transformer Case

Dimensionals

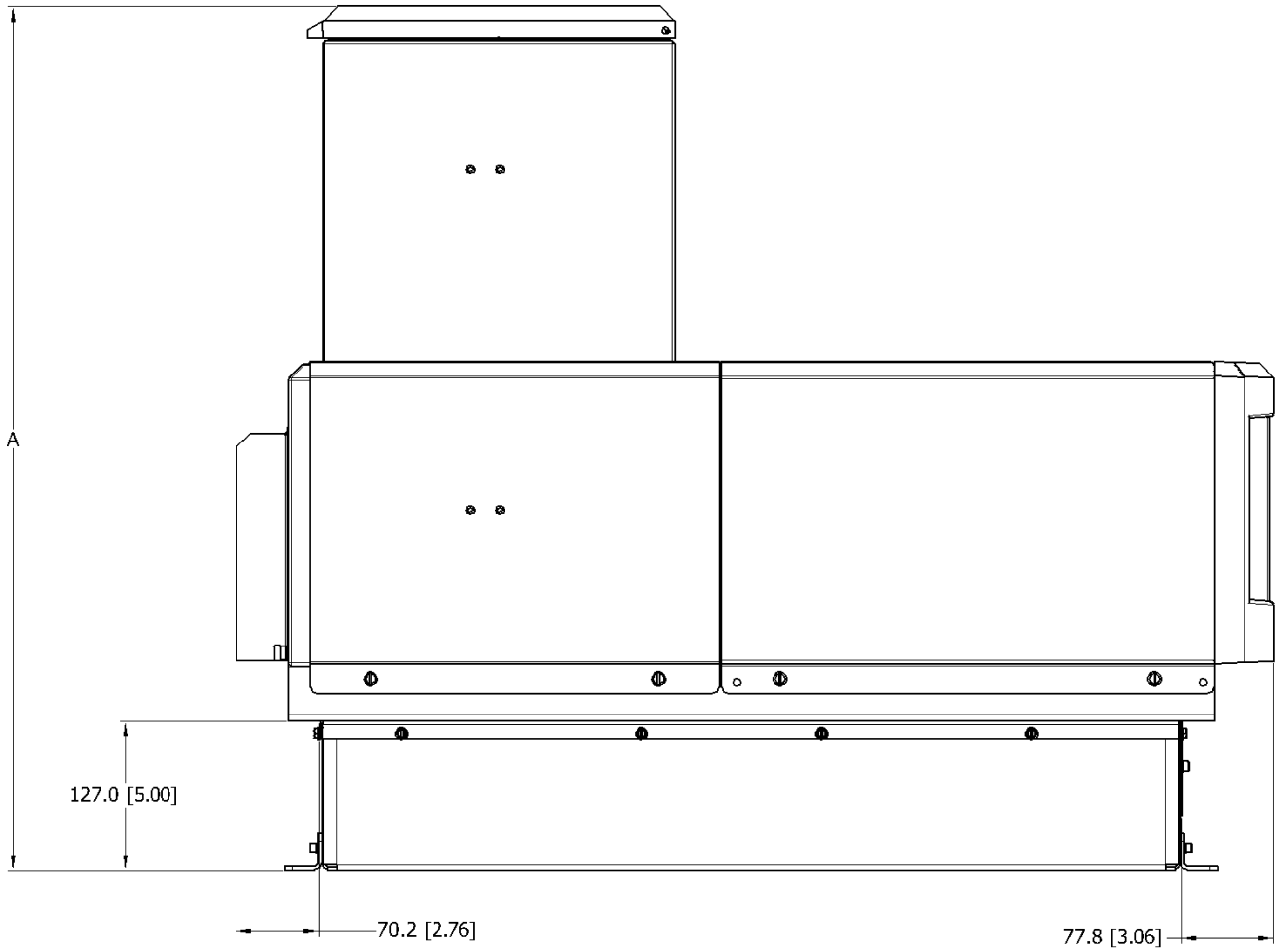

DIMENSION	A
DMS 22/ C22/ N22/ N26mm [inch] DMS 45mm [inch]	736.6 [29.0] 1143.0 [45.0]

Dynamelt S 22 or 45/ C22/ N22/ N26 ASU on Transformer Case

Mounting

Transformer case can be mounted to the ASU by using one of the following methods:

a. Four 10.2∅[0.40∅] holes on end-mounting flanges or

b. Four 1/4-20 bolts mounted through the frame and transformer case into four 1/4-20 rivet nuts installed into the ASU base rail.

The end-mounting flanges are removable.

Installation

Make sure that the incoming line power to the ASU is disconnected and locked out.

Turn OFF the ASU's main power switch.

DANGER HIGH VOLTAGE

Disconnect and lock out input power to the application system before startĆ ing any installation procedures. Make sure there is no electrical power on the leads you will be connecting.

1. Remove the four socket head cap screws and junction box covers located on the back of the transformer enclosure.

2. Run the power cord through the strain relief fitting on the junction box cover.

3. Attach the power cord to the terminal block shown below. Insert ground wire and attach to the ground lug shown below.

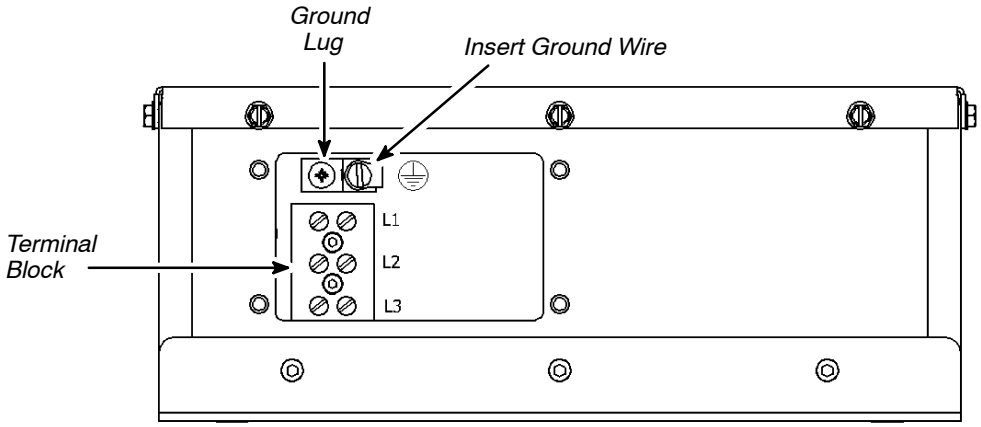

4. Tighten the clamp screws on the strain relief fitting.

5. Re-attach the junction box cover.

Wattage Chart

ASU		Hopper	Hose/ Head 1 & 2	Hose/ Head 3 & 4	Hose/Head 5 & 6	ASU Circuit Breaker 3PH 400 or 480VAC
DMS05/10	**2 hose**	1500 w 3.1Amp	1800W 3.75Amp			25A PN 810263
	4 hose	1500 w 3.1Amp	1800W 3.75Amp	1800W 3.75Amp		25A PN 810263
	6 hose	1500 w 3.1Amp	1800W 3.75Amp	1800W 3.75Amp	1800W 3.75Amp	25A PN 810263
DMS22/45	**2 hose**	2500 w 5.2Amp	1800W 3.75Amp			25A PN 810263
	4 hose	2500 w 5.2Amp	1800W 3.75Amp	1800W 3.75Amp		25A PN 810263
	6 hose	2500 w 5.2Amp	1800W 3.75Amp	1800W 3.75Amp	1800W 3.75Amp	25A PN 810263
N22	**2 hose**	2500W 5.2Amp	1800W 3.75A			25A PN 810263
C22	**6 hose**	2500W 5.2Amp	1800W 3.75A	1800W 3.75A	1800W 3.75A	25A PN 810263
N26	**6 hose**	2500W 5.2Amp	1800W 3.75A	1800W 3.75A	1800W 3.75A	25A PN 810263

Chapter 3
SERVICE

Note: Re-read Chapter 1 “Safety Precautions" before performing any service or maintenance procedures. All service or maintenance procedures must be performed by qualified, trained technicians.

Fuse Replacement

Disconnect 400/480VAC circuit breaker. Lockout and tag circuit breaker and plug.

Turn OFF the ASU’s main power switch. Verify that power to the ASU is disconnected.

DANGER HIGH VOLTAGE

Disconnect and lock out input power to the application system before starting any installation procedures. Make sure there is no electrical power on the leads you will be connecting.

1. Remove the front fuse access panel.

2. Locate the failed fuse by checking continuity with a multi-meter.

3. Replace fuse.

Transformer Replacement

1. Drain all adhesive from the ASU’s hopper.

2. Turn ASU power off and allow unit to cool.

3. Disconnect 400/480VAC circuit breaker. Lockout and tag circuit breaker and plug.

4. Verify that power to the ASU is disconnected.

DANGER HIGH VOLTAGE

Disconnect and lock out input power to the application system before starting any installation procedures. Make sure there is no electrical power on the leads you will be connecting.

5. *Remove transformer case from ASU:*

   a. Remove all 13 thread-forming screws from lid of the case.

   b. Lay the entire ASU on its side.

   c. Remove the bolts attaching the transformer case from the machine’s frame.

cont.

6. Separate the lid from the transformer case.

7. *Remove the failed transformer:*

   a. Test transformer(s) to find failure by checking continuity (with a multi-meter) across primary and secondary coils. Refer to schematic in Ch. 4.

   b. Note and record the location of all wiring before removing transformer.

   c. Disconnect and remove wiring to failed transformer.

   d. Install new transformer.

   e. Re-connect wiring and re-assemble case to ASU.

Recommended Spare Parts List

Part Number	Description	Qty.
116268	Solid State Relay, Single, 480, DC IN	1
812419	Fuse, LPCC, 10amp	4, 6 or 8*
For PN 115305 Grid Group, DMS 22/ 45, 480VAC:		
812419	Fuse, LPCC, 10amp	2
116268	Solid State Relay, Single, 480, DC IN	1
107183	Sensor, RTD, hopper	1
N00192	O-ring 032	2
N00181-10	O-ring 014	1

** Quantity dependant on ASU configuration:*
2 Hose/ 2 Head ASU = 4 fuses
4 Hose/ 4 Head ASU = 6 fuses
6 Hose/ 6 Head ASU = 8 fuses

Chapter 4
ENGINEERING DRAWINGS & BILLS OF MATERIAL

WARNING

All parts must be periodically inspected and replaced if worn or broken. Failure to do this can affect equipment's operation and can result in personal injury.

Chapter Format

This chapter contains the component illustrations (exploded-view drawings) for the assemblies of the Dynatec Step-Down Transformer Groups. These drawings are useful for finding part numbers as well as for use when maintaining or repairing the unit.

Note: most common nuts, bolts and fasteners can be obtained locally at your hardware store. Specialty fasteners are available by contacting Dynatec's Customer Service.

THIS DRAWING IS THE PROPERTY OF ITW/DYNATEC.
DO NOT REPRODUCE OR DISCLOSE TO
OTHERS WITHOUT EXPRESS WRITTEN
CONSENT OF ITW/DYNATEC.

REVISIONS

REL.	REV.	DESCRIPTION	DATE	BY	APPROVED
N09037	A	ORIGINAL RELEASE	5.13.09	CRF	
09154	B	ADD JNCTN BOX DETAIL	6.12.09	CRF	
09185	C	ADD N22, N26, & C22 UNITS	7.20.09	CRF	
09239	D	ADD 103379 TO TABULATION	9.8.09	CRF	
10307	E	ITEM 15 WAS QTY .50, ADDED ITEM 1A, ITEMS 1-3 & 37 WERE QTY 1, ITEM 4 WAS QTY 2, ITEM 26 WAS 115230, ADDED ITEMS 46-49	2.18.11	BB	
16056	F	ITEM 24 WAS 115303, ITEM 25 WAS 115304 ITEM 42 WAS #50-23 CHANGE ITEM 15 QUANTITIES	08.09.16	JC	
C1004	G	ITEM 45 CHANGED TO REF	06.26.18	PK	
ECR18117	H	ITEM 43 CHNG TO 10AWG,ADD ITEM 50	10.01.18	PK	
ECN1313	I	CHANGE QTY OF ITEM 29	05.26.21	JJB	

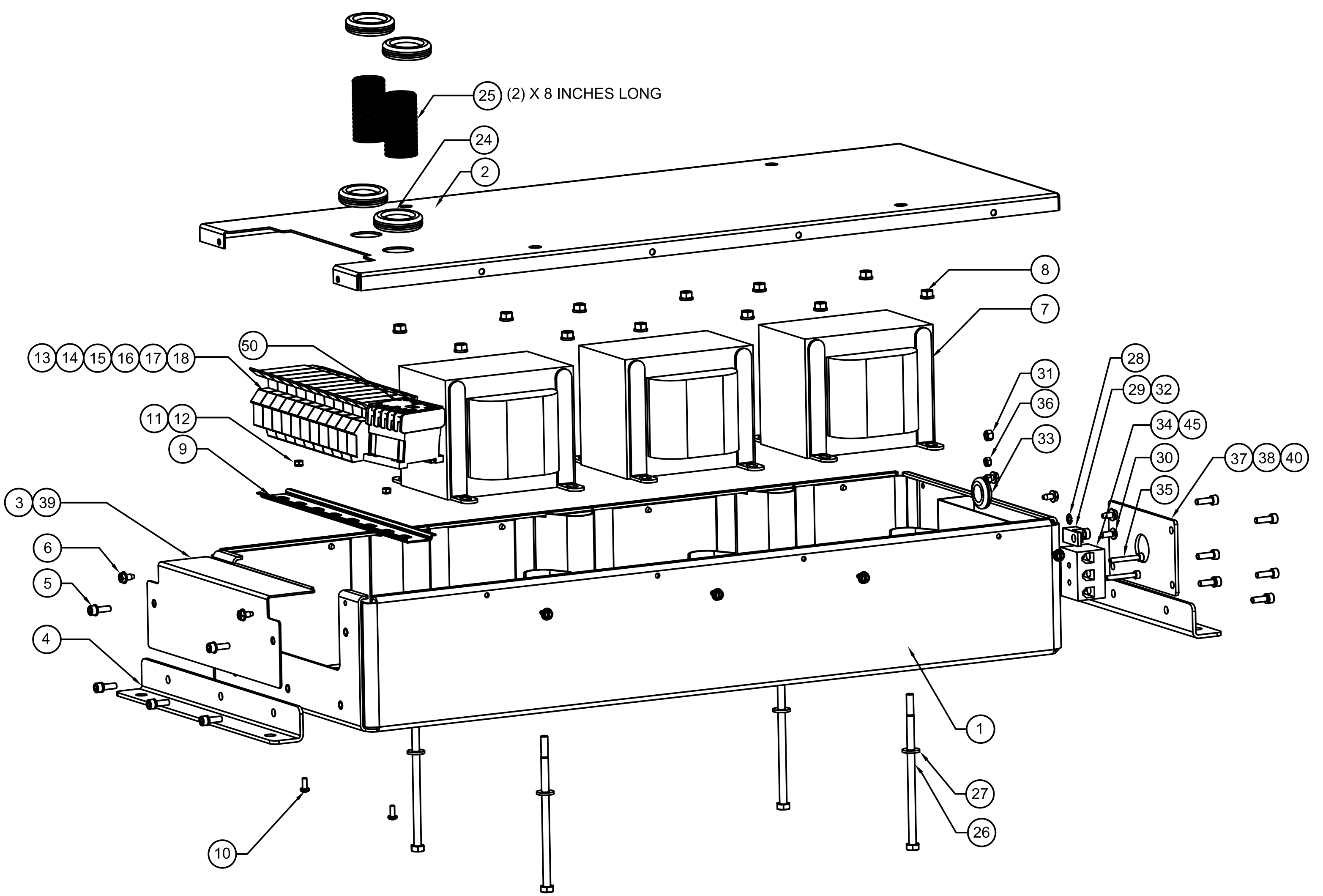

ITEM	PART NUMBER	QTY	UM	DESCRIPTION
50	122703	1	EA	CONTACTOR ASSY
49	112543	SEE TAB	EA	POWER CONFIGURATION PLUG
48	116187	SEE TAB	EA	JUMPER ASSY, 400/480V
47	101236	1	EA	HOLE PLUG - BASE PLATE (NOT SHOWN)
46	116613	SEE TAB	EA	CONNECTOR, IDC, .156, 4 POS, END (NOT SHOWN)
45	115594	REF	EA	LABEL, L1 L2 L3 BRADY
44	N04281	SEE BOM	EA	RING TERM, UNINSUL
43	802825	SEE BOM	FT	WIRE, THHN, LT BLUE, 10AWG
42	104162	SEE TAB	EA	ENDPLATE,FOR PN 104161
41	SEE TAB	0	REF	SCHEMATIC, XFORMER GROUP
40	103498	1	EA	LBL, WARN, ELEC HAZZARD
39	048K778	1	EA	HAZARDOUS VOLTAGE WARNING LBL
38	105199	1	EA	STRAIN RELIEF, 3/4
37	115380	REF	EA	COVER, JUNCTION BOX
36	107391	2	EA	NUT, M4, ZINC, KEPS
35	803083	2	EA	SHCS, M4X34, ZINC
34	115381	1	EA	TERM BLOCK, 3 POLE, 85A
33	108826	1	EA	GROMMET, RBR, 5/8X1-1/8X5/16
32	804839	1	EA	GROUND LABEL
31	109137	1	EA	NUT, HEX, M5, KEPS, ZINC
30	111633	1	EA	SCREW, M5X10, PAN HD, ZINC
29	105562	2	EA	GROUND LUG
28	N04302	1	EA	WASHER, LOCK, EXTERNAL TOOTH #10
27	078C004	4	EA	WASHER, 1/4 SAE
26	115320	4	EA	BOLT, HEX, 1/4-20X5.5L
25	104121	1.33	FT	CND,CORR,NYLON,PG11
24	107539	4	EA	GROMMET,RUBBER,3/4 ID
23	102646	SEE BOM	FT	SLEEVING, SI/RBR FIBERGLASS, BLK, 1/2
22	N07061	SEE BOM	FT	SLEEVING, SI/RBR FIBERGLASS, BLK, #2
21	042X131	SEE BOM	FT	WIRE, TFE, 16AWG, 260C, BLK
20	802822	SEE BOM	FT	WIRE, GREEN/YELLOW, 12AWG
19	N05860	SEE BOM	FT	WIRE, THHN, BLK, 14AWG
18	105256	2	EA	END STOP, DIN RAIL
17	103379	SEE TAB	EA	TERM BLOCK, 50A, DIN
16	812419	SEE TAB	EA	FUSE, LPCC, 10 AMP, 600V
15	048I126	SEE TAB	EA	FUSE BLOCK, 600V 10A, DIN
14	104161	SEE TAB	EA	TERM, 105A, 600V, 4AWG, DIN
13	103663	1	EA	TERM BLK, #6 GND, DIN
12	107391	2	EA	NUT, M4-0.7, KEPS
11	105164	2	EA	WASHER, FLAT, #8, BLK
10	107389	2	EA	SCREW, PHP,M4X8 KEPS
9	048F104	.96	FT	DIN RAIL, H32
8	107390	SEE TAB	EA	NUT,M6-1.0,W/KEPS WASHER
7	115047	SEE TAB	EA	TANSFORMER, 1.8KVA, 480/400 PRMY, 240 SNDRY
6	078A164	13	EA	SCREW,HWH,10-24X1/2,TYPE F SELF TAPPING
5	106242	12	EA	SCREW, SHC,M5X16
4	115048	REF	EA	BRACKET, BASE MOUNT
3	115044	REF	EA	COVER, FUSE ACCESS
2	115043	REF	EA	COVER, TRANSFORMER ENCLOSURE
1	115045	REF	EA	BASE, TRANSFORMER CASE ASSY
1A	115300	1	EA	KIT, TRANSFORMER CASE (INCLUDES ITEMS 1-4, 37)

PART NO.	DESCRIPTION	SCHEMATIC	115047 QTY	107390 QTY	048I126 QTY	812419 QTY	103379 QTY	106613 QTY	116187 QTY	112543 QTY	104161 QTY	104162 QTY
115308	XFMR GRP, 2H, 480, DMS	115309	1	4	3	4	1	1	–	–	4	4
115310	XFMR GRP, 2H, 400, DMS	115311	1	4	3	4	1	1	–	–	4	4
115312	XFMR GRP, 4H, 480, DMS	115313	2	8	4	6	2	1	–	–	5	5
115314	XFMR GRP, 4H, 400, DMS	115315	2	8	4	6	2	1	–	–	5	5
115316	XFMR GRP, 6H, 480, DMS	115317	3	12	5	8	3	1	–	–	6	6
115318	XFMR GRP, 6H, 400, DMS	115319	3	12	5	8	3	1	–	–	6	6
115387	XFMR GRP, 480, N26/C22	115388	3	12	5	8	3	–	1	1	6	6
115389	XFMR GRP, 400, N26/C22	115390	3	12	5	8	3	–	1	1	6	6
115391	XFMR GRP, 480V, N22	115392	1	4	3	4	1	–	1	–	4	4
115393	XFMR GRP, 400V, N22	115394	1	4	3	4	1	–	1	–	4	4

UNLESS OTHERWISE SPECIFIED DIMS ARE IN MILLIMETERS/INCHES
TOLERANCES ARE:
(MM)DECIMALS (IN)DECIMALS ANGLES
X. ±0.5 .XX ±.010 ±.5
.X ±0.25 .XXX ±.005
.XX ±0.10

FOR MACHINING STANDARDS AND SYMBOLS, SEE ITW/DYNATEC SPEC. A05800

ITW Dynatec HENDERSONVILLE, TN

USED ON: 480V DMS

NEXT ASSY.:

DO NOT SCALE DRAWING

APPROVALS	DATE
DRAWN CRF	5.8.09
CHECKED	

COMPUTER DESCRIPTION(24 CHARACTERS)

TRANSFORMER GRP 480/400V DMS

U/M: EA
STATUS: P
SOURCE: C
SIZE: D
DWG. NO.: 115308
REV: I
GROUP: 00
SCALE: 1:2
CAD DRAWING
SHEET 1 OF 1

THIS DRAWING IS THE PROPERTY OF ITW/DYNATEC.
DO NOT REPRODUCE OR DISCLOSE TO
OTHERS WITHOUT EXPRESS WRITTEN
CONSENT OF ITW/DYNATEC.

DWG. NO. 115305	SHT. 1	REV. B

REVISIONS

REL.	REV.	DESCRIPTION	DATE	BY	APPROVED
N09037	A	ORIGINAL RELEASE	5.13.09	CRF	
15012	B	ITEM 8 WAS 810262	02.23.15	JC	

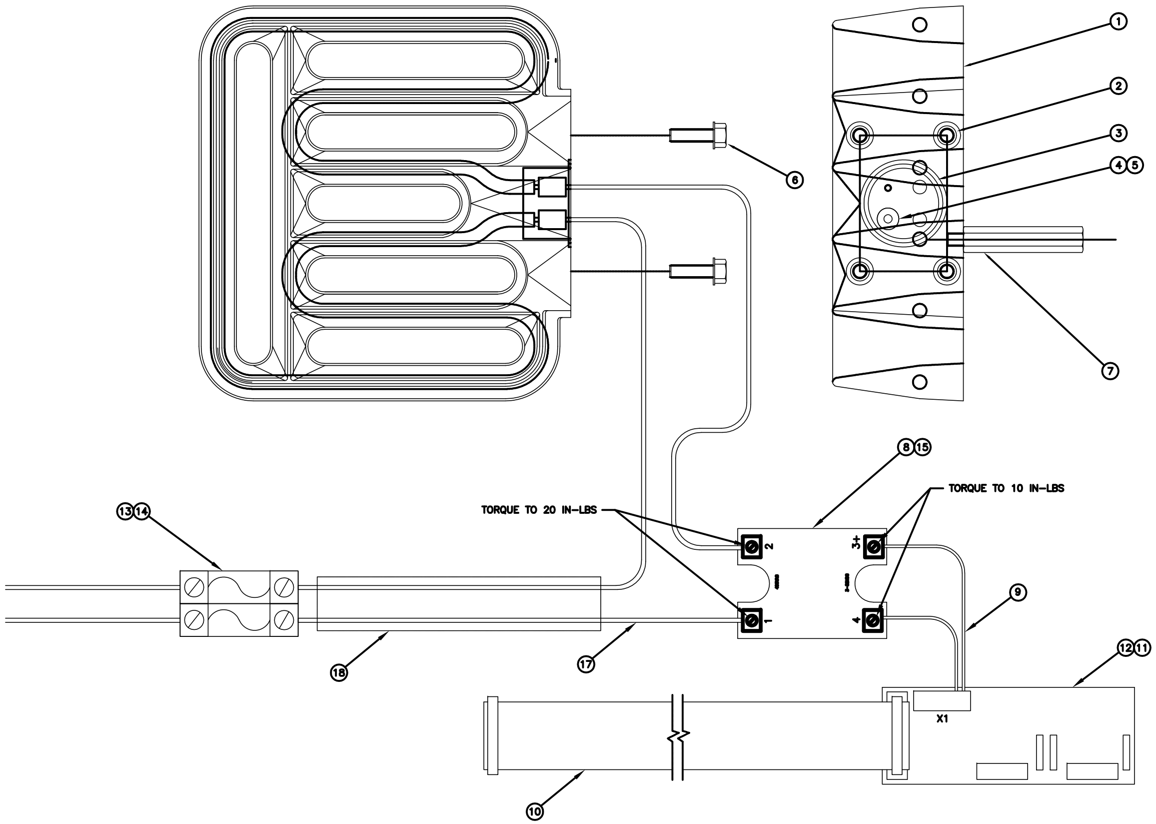

NOTES:

1. STRIP LEADS 6,4[.25].
2. LUBRICATE ALL O-RINGS WITH ITW DYNATEC HIGH TEMP O-RING LUBE.
3. PLUG THE SENSOR (ITEM 5) INTO THE BUSS PCB IN THE PROPER LOCATION.
4. INSTALL THE SUPPORT (ITEM 7) FOR AN S22 AND THE LOWER GRID FOR AN S45.

ITEM	PART NUMBER	QTY	U/M	DESCRIPTION
17	N05860	1.5	FT	WIRE, THHN BLK, 14AWG
16	N07061	1	FT	SLVG, SI RBR/FGLS, BLK#2
15	812241	1	EA	COVER, SSR, 805634
14	812419	2	EA	FUSE, LPCC 10AMP
13	048I126	2	EA	FUSE HOLD .40X1.5 DISC
12	106529	1	EA	PAD, THERMAL, PCB
11	106095	1	EA	PCB ASSY, AUX POWER
10	106379	1	EA	CABLE ASSY,EXP PT, 1A
9	115306	1	EA	CABLE ASSY, 480V GRID SSR
8	116268	1	EA	SSR, 480VAC, 50A,DC IN
7	107525	1	EA	SUPPORT, LOWER GRID
6	108297	4	EA	SCREW, HEX HD, SERRATED, M8X20MM
5	107183	1	EA	SENSOR, RTD HOPPER
4	106174	1	EA	SENSOR ADAPTOR
3	N00192	1	EA	O-RING, -032
2	N00181	4	EA	O-RING, -014
1	115286	1	EA	GRID,MACH,DM,480V

UNLESS OTHERWISE SPECIFIED DIMENSIONS ARE IN MILLIMETERS
TOLERANCES ARE:
DECIMALS .X =±0.25 [.010] .XX =±0.10 [.004]
ANGLES ±.5°

FOR MACHINING STANDARDS AND SYMBOLS, SEE ITW/DYNATEC SPEC. A05800

ITW Dynatec
HENDERSONVILLE, TN

U/M: EA

USED ON: DMS 480V

NEXT ASSY.: -

DO NOT SCALE DRAWING

APPROVALS		DATE
DRAWN	CRF	4.29.09
CHECKED		

COMPUTER DESCRIPTION(24 CHARACTERS): GRID GRP,S22/45,480V

GRID GROUP DMS22/45 480VAC

STATUS
SOURCE
GROUP

SIZE: D | DWG. NO. 115305 | REV. B

SCALE 1:1 | CAD DRAWING | SHEET 1 of 1

115332 1 F

10114	D	INITIAL RELEASE	7.23.10	CRF	
10307	E	ADDED 31.8 [1.25] DIA HOLE ADDED PART NO. 116822	2.14.11	BB	
16056	F	REMOVE 2 HOLES	08.09.16	JC	

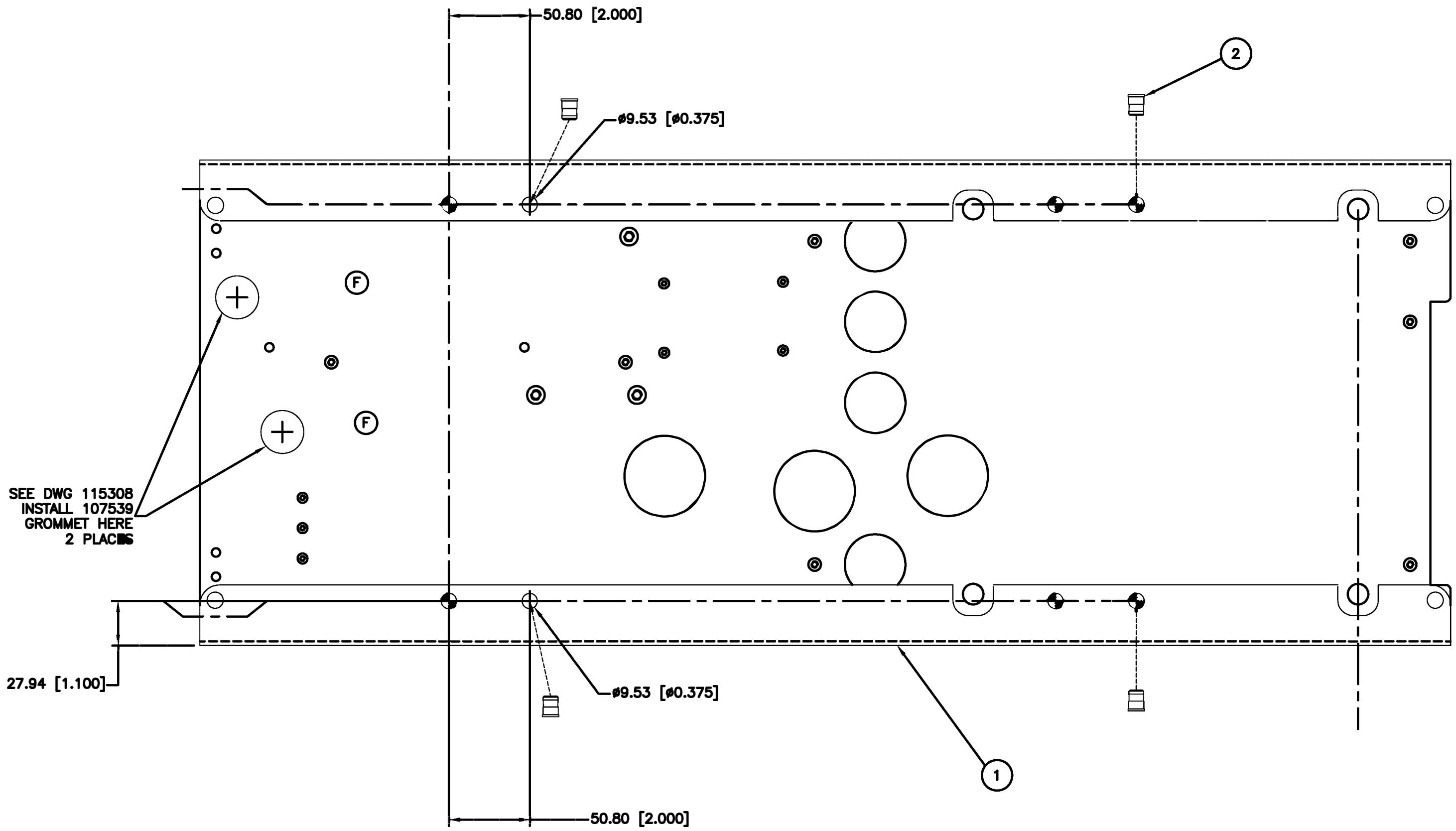

BOTTOM VIEW

P/N	DESCRIPTION	MAKE FROM BASE RAIL P/N
115332	BASE,DMS S22/45 MOD	106090
115402	BASE, N22 MOD	111422
(E) 116822	BASE, N26/C22 MOD	111422

2	115302	4	EA	RIVET NUT, 1/4-20
1	SEE TAB	1	EA	BASE, DMS
				SEE SHT. 1

PARTS LIST

ITW Dynatec

USED ON: 480V DMS 22/45

DRAWN: CRF 3.30.99

BASE, DMS 22/45, MODIFED

DO NOT SCALE DRAWING

BASE, DYNAMELT-S, 22/45 MODIFIED

U/M: EA

STATUS: P

D 115332 F

SCALE 2/3 CAD DRAWING SHEET 1 of 1

THIS DRAWING IS THE PROPERTY OF ITW/DYNATEC.
DO NOT REPRODUCE OR DISCLOSE TO
OTHERS WITHOUT EXPRESS WRITTEN
CONSENT OF ITW/DYNATEC.

REVISIONS					
REL.	REV.	DESCRIPTION	DATE	BY	APPROVED
N09037	A	ORIGINAL RELEASE	5.13.09	CRF	
09154	B	ADD JNCTN BOX DETAIL	6.11.09	CRF	
09239	C	ADD LABELS L1,L2,L3,L1A,L2A,&L3A ADD GRND FROM PE TO TERM	9.8.09	CRF	
10114	D	CHNG SSR 810262 TO 116268	7.23.10	CRF	
10307	E	ITEM 19 WAS N05889	2.18.11	BB	
16038 16056	F	SECOND.NEUT.GROUND, NO FUSE UPDATE BOM	5.24.16 8.10.16	DH JC	
18117	G	ADDED CONTACTOR,ITEM 22	09.28.18	BFQ	
ECN618	H	CHANGES PER ECR-19-741	10.10.19	DJT	
ECN1103	I	REVISED CONTACTOR	10.15.20	JJB	
21-1594	J	CHANGE QTY OF ITEM 17	05.26.21	JJB	

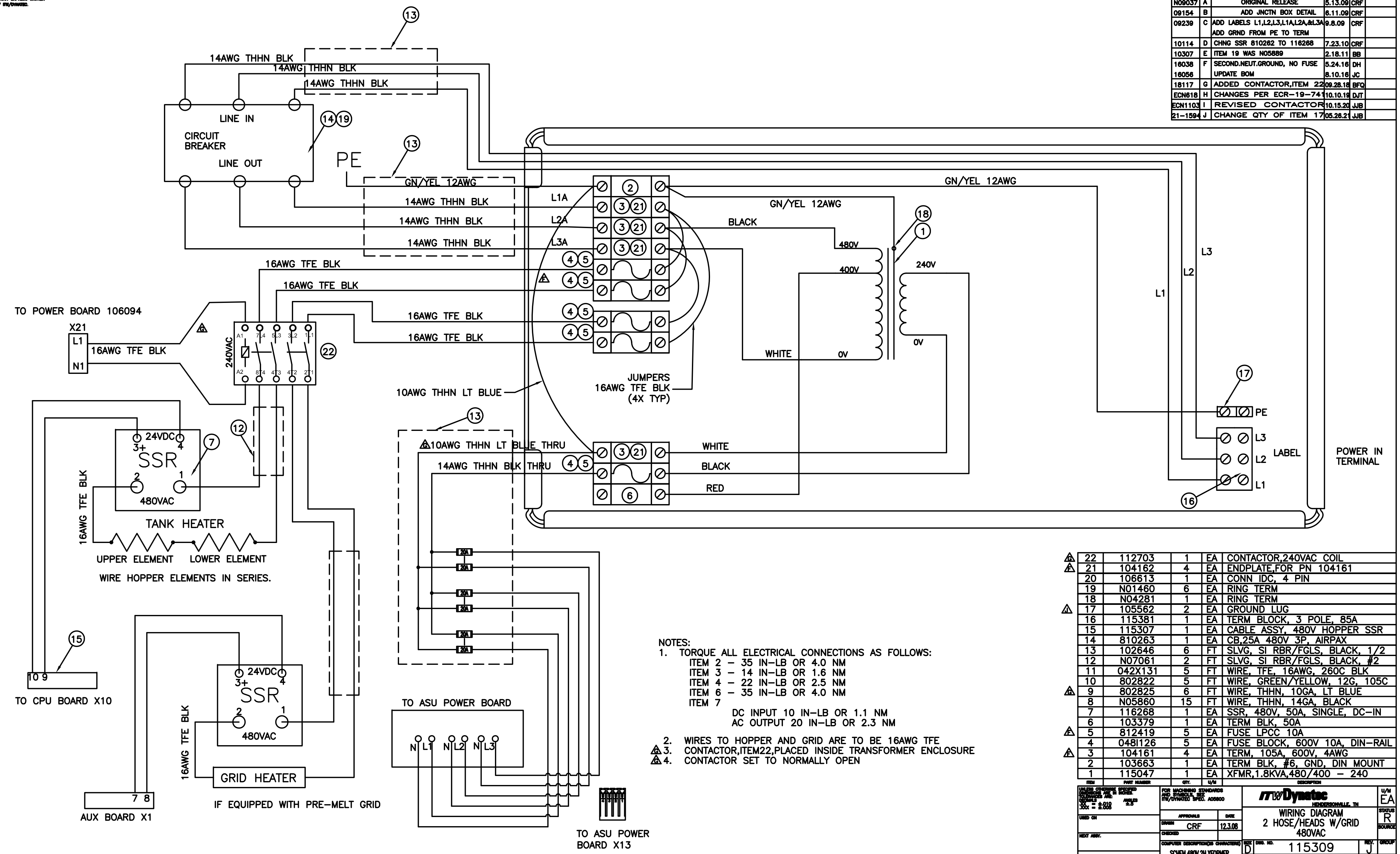

NOTES:
1. TORQUE ALL ELECTRICAL CONNECTIONS AS FOLLOWS:
ITEM 2 – 35 IN–LB OR 4.0 NM
ITEM 3 – 14 IN–LB OR 1.6 NM
ITEM 4 – 22 IN–LB OR 2.5 NM
ITEM 6 – 35 IN–LB OR 4.0 NM
ITEM 7
DC INPUT 10 IN–LB OR 1.1 NM
AC OUTPUT 20 IN–LB OR 2.3 NM
2. WIRES TO HOPPER AND GRID ARE TO BE 16AWG TFE
(F) 3. CONTACTOR,ITEM22,PLACED INSIDE TRANSFORMER ENCLOSURE
(G) 4. CONTACTOR SET TO NORMALLY OPEN

REV.	ITEM	PART NUMBER	QTY.	U/M	DESCRIPTION
G	22	112703	1	EA	CONTACTOR,240VAC COIL
F	21	104162	4	EA	ENDPLATE,FOR PN 104161
	20	106613	1	EA	CONN IDC, 4 PIN
	19	N01460	6	EA	RING TERM
	18	N04281	1	EA	RING TERM
J	17	105562	2	EA	GROUND LUG
	16	115381	1	EA	TERM BLOCK, 3 POLE, 85A
	15	115307	1	EA	CABLE ASSY, 480V HOPPER SSR
	14	810263	1	EA	CB,25A 480V 3P, AIRPAX
	13	102646	6	FT	SLVG, SI RBR/FGLS, BLACK, 1/2
	12	N07061	2	FT	SLVG, SI RBR/FGLS, BLACK, #2
	11	042X131	5	FT	WIRE, TFE, 16AWG, 260C BLK
	10	802822	5	FT	WIRE, GREEN/YELLOW, 12G, 105C
G	9	802825	6	FT	WIRE, THHN, 10GA, LT BLUE
	8	N05860	15	FT	WIRE, THHN, 14GA, BLACK
	7	116268	1	EA	SSR, 480V, 50A, SINGLE, DC-IN
	6	103379	1	EA	TERM BLK, 50A
F	5	812419	5	EA	FUSE LPCC 10A
	4	0481126	5	EA	FUSE BLOCK, 600V 10A, DIN-RAIL
F	3	104161	4	EA	TERM, 105A, 600V, 4AWG
	2	103663	1	EA	TERM BLK, #6, GND, DIN MOUNT
	1	115047	1	EA	XFMR,1.8KVA,480/400 – 240

UNLESS OTHERWISE SPECIFIED DIMENSIONS ARE IN INCHES. TOLERANCES ARE:
DECIMALS .XX = ±.010 .XXX = ±.005 ANGLES ±.5

FOR MACHINING STANDARDS AND SYMBOLS, SEE ITW/DYNATEC SPEC. A05800

USED ON
NEXT ASSY.
DO NOT SCALE DRAWING

APPROVALS	DATE
DRAWN CRF	12.3.08
CHECKED	

COMPUTER DESCRIPTION(25 CHARACTERS): SCHEM,480V,2H,XFORMER

ITW Dynatec
HENDERSONVILLE, TN

WIRING DIAGRAM 2 HOSE/HEADS W/GRID 480VAC

U/M: EA
STATUS: R
SOURCE:
SIZE: D
DWG. NO.: 115309
REV.: J
GROUP:
SCALE: N.T.S.
CAD DRAWING
SHEET 1 of 1

THIS DRAWING IS THE PROPERTY OF ITW/DYNATEC. DO NOT REPRODUCE OR DISCLOSE TO OTHERS WITHOUT EXPRESS WRITTEN CONSENT OF ITW/DYNATEC.

REVISIONS					
REL.	REV.	DESCRIPTION	DATE	BY	APPROVED
N09037	A	ORIGINAL RELEASE	5.13.09	CRF	
09154	B	ADD JNCTN BOX DETAIL	6.11.09	CRF	
09239	C	ADD LABELS L1,L2,L3,L1A,L2A,&L3A ADD GRND FROM PE TO TERM	9.8.09	CRF	
10114	D	CHNG SSR 810262 TO 116268	7.23.10	CRF	
10307	E	ITEM 19 WAS N05889	2.18.11	BB	
16038 16056	F	SECONF.NEUTR.GROUND, NO FUSE UPDATE BOM	5.24.16 8.10.16	DH JC	
18117	G	ADDED CONTACTOR,ITEM 22	09.25.18	BFQ	
1103	H	REVISED CONTACTOR	10.15.20	JJB	
21-1594	I	CHANGE QTY OF ITEM 17	05.26.21	JJB	

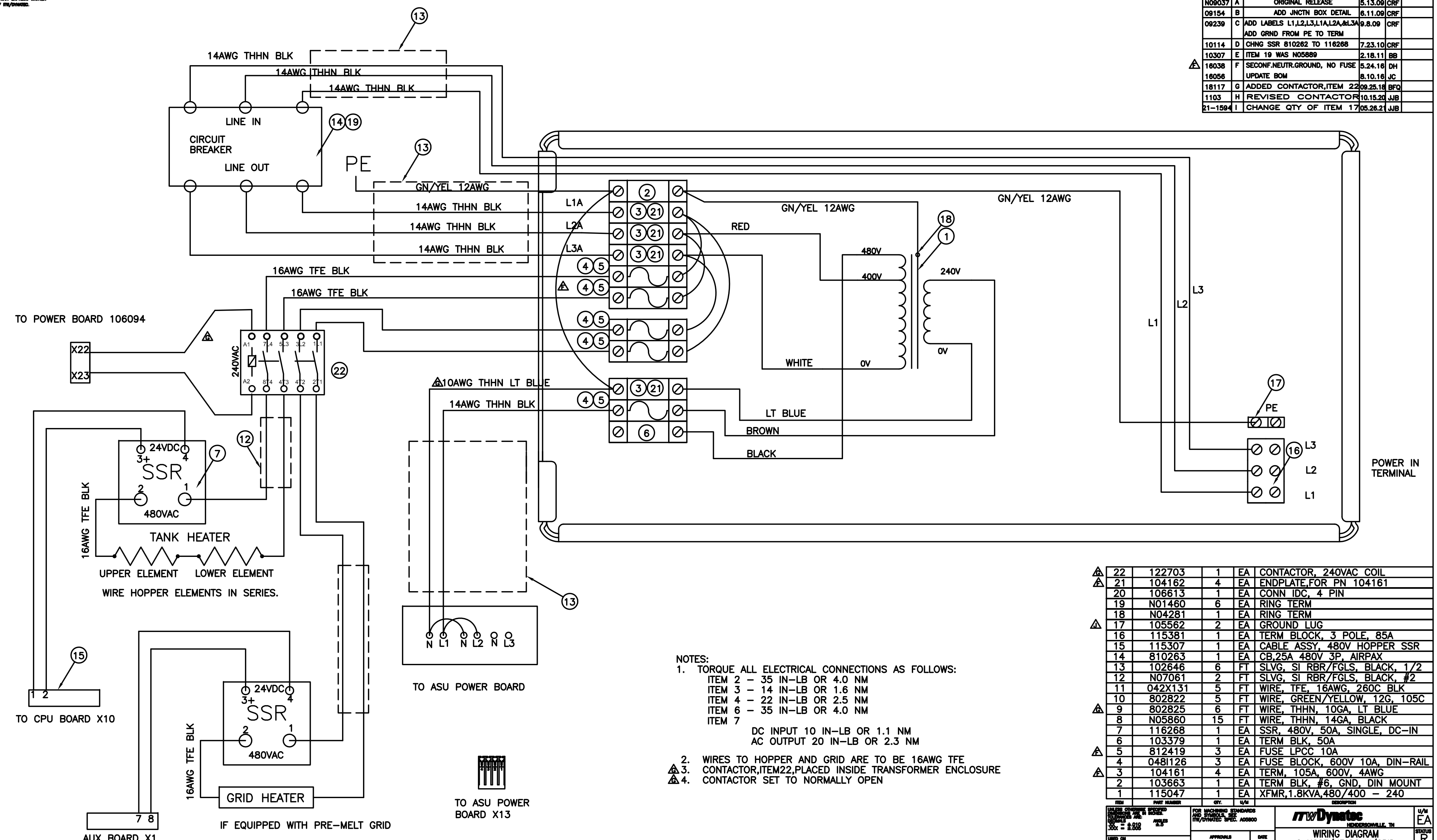

NOTES:

1. TORQUE ALL ELECTRICAL CONNECTIONS AS FOLLOWS:
   - ITEM 2 – 35 IN-LB OR 4.0 NM
   - ITEM 3 – 14 IN-LB OR 1.6 NM
   - ITEM 4 – 22 IN-LB OR 2.5 NM
   - ITEM 6 – 35 IN-LB OR 4.0 NM
   - ITEM 7
     - DC INPUT 10 IN-LB OR 1.1 NM
     - AC OUTPUT 20 IN-LB OR 2.3 NM
2. WIRES TO HOPPER AND GRID ARE TO BE 16AWG TFE
3. CONTACTOR,ITEM22,PLACED INSIDE TRANSFORMER ENCLOSURE
4. CONTACTOR SET TO NORMALLY OPEN

ITEM	PART NUMBER	QTY.	U/M	DESCRIPTION
22	122703	1	EA	CONTACTOR, 240VAC COIL
21	104162	4	EA	ENDPLATE,FOR PN 104161
20	106613	1	EA	CONN IDC, 4 PIN
19	N01460	6	EA	RING TERM
18	N04281	1	EA	RING TERM
17	105562	2	EA	GROUND LUG
16	115381	1	EA	TERM BLOCK, 3 POLE, 85A
15	115307	1	EA	CABLE ASSY, 480V HOPPER SSR
14	810263	1	EA	CB,25A 480V 3P, AIRPAX
13	102646	6	FT	SLVG, SI RBR/FGLS, BLACK, 1/2
12	N07061	2	FT	SLVG, SI RBR/FGLS, BLACK, #2
11	042X131	5	FT	WIRE, TFE, 16AWG, 260C BLK
10	802822	5	FT	WIRE, GREEN/YELLOW, 12G, 105C
9	802825	6	FT	WIRE, THHN, 10GA, LT BLUE
8	N05860	15	FT	WIRE, THHN, 14GA, BLACK
7	116268	1	EA	SSR, 480V, 50A, SINGLE, DC-IN
6	103379	1	EA	TERM BLK, 50A
5	812419	3	EA	FUSE LPCC 10A
4	048I126	3	EA	FUSE BLOCK, 600V 10A, DIN-RAIL
3	104161	4	EA	TERM, 105A, 600V, 4AWG
2	103663	1	EA	TERM BLK, #6, GND, DIN MOUNT
1	115047	1	EA	XFMR,1.8KVA,480/400 – 240

UNLESS OTHERWISE SPECIFIED DIMENSIONS ARE IN INCHES. TOLERANCES ARE: DECIMALS .XX = ±.010 .XXX = ±.005 ANGLES ±.5	FOR MACHINING STANDARDS AND SYMBOLS, SEE ITW/DYNATEC SPEC. A05800	ITW Dynatec HENDERSONVILLE, TN		U/M EA
USED ON	APPROVALS / DATE; DRAWN CRF 12.3.08; CHECKED	WIRING DIAGRAM 2 HOSE/HEADS W/GRID 400VAC		STATUS R SOURCE
NEXT ASSY.	COMPUTER DESCRIPTION(25 CHARACTERS) SCHEM,400V,2H,XFORMER	SIZE D	DWG. NO. 115311	REV. I GROUP
DO NOT SCALE DRAWING		SCALE N.T.S.	CAD DRAWING	SHEET 1 of 1

THIS DRAWING IS THE PROPERTY OF ITW/DYNATEC.
DO NOT REPRODUCE OR DISCLOSE TO
OTHERS WITHOUT EXPRESS WRITTEN
CONSENT OF ITW/DYNATEC.

REL.	REV.	DESCRIPTION	DATE	BY	APPROVED
N09037	A	ORIGINAL RELEASE	5.13.09	CRF	
09154	B	ADD JNCTN BOX DETAIL	6.11.09	CRF	
09239	C	ADD LABELS L1,L2,L3,L1A,L2A,&L3A ADD GRND FROM PE TO TERM	9.8.09	CRF	
10114	D	CHNG SSR 810262 TO 116268	7.23.10	CRF	
16038	F	SECOND.NEUTR.GROUND, NO FUSE	5.24.16	DH	
16056		UPDATE BOM	8.10.16	JC	
C1022	G	ADDED COMMENT 2	7.16.18	DLR	
C1109	H	CHANGED GND TO 14AWG	09.13.18	BFQ	
18117	J	ADDED CONTACTOR,ITEM 22	09.25.18	BFQ	
1103	K	REVISED CONTACTOR	10.15.20	JJB	
21-1594	L	CHANGED QTY OF ITEM 17	05.26.21	JJB	

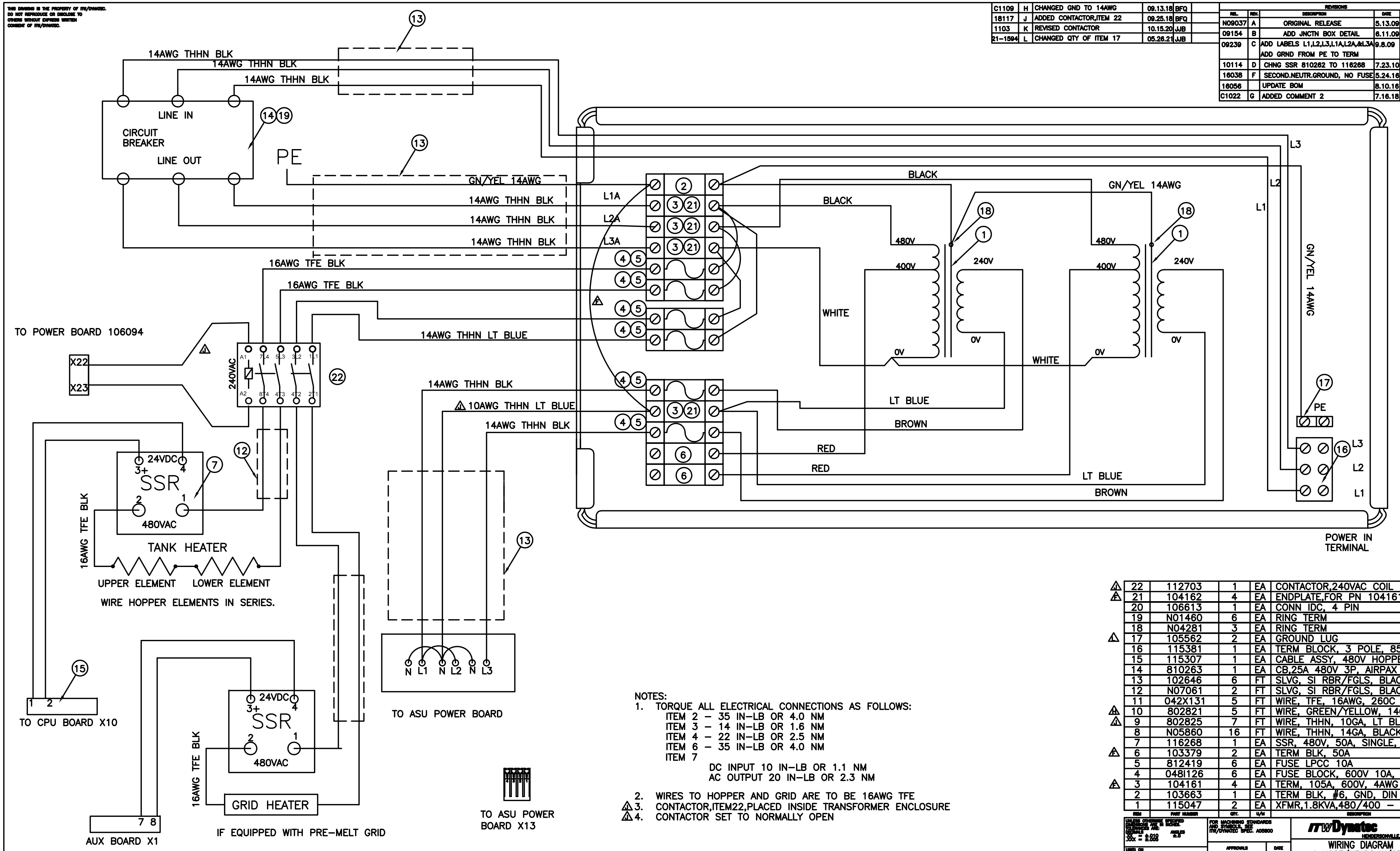

NOTES:
1. TORQUE ALL ELECTRICAL CONNECTIONS AS FOLLOWS:
   ITEM 2 – 35 IN-LB OR 4.0 NM
   ITEM 3 – 14 IN-LB OR 1.6 NM
   ITEM 4 – 22 IN-LB OR 2.5 NM
   ITEM 6 – 35 IN-LB OR 4.0 NM
   ITEM 7
      DC INPUT 10 IN-LB OR 1.1 NM
      AC OUTPUT 20 IN-LB OR 2.3 NM
2. WIRES TO HOPPER AND GRID ARE TO BE 16AWG TFE
3. CONTACTOR,ITEM22,PLACED INSIDE TRANSFORMER ENCLOSURE
4. CONTACTOR SET TO NORMALLY OPEN

ITEM	PART NUMBER	QTY.	U/M	DESCRIPTION
22	112703	1	EA	CONTACTOR,240VAC COIL
21	104162	4	EA	ENDPLATE,FOR PN 104161
20	106613	1	EA	CONN IDC, 4 PIN
19	N01460	6	EA	RING TERM
18	N04281	3	EA	RING TERM
17	105562	2	EA	GROUND LUG
16	115381	1	EA	TERM BLOCK, 3 POLE, 85A
15	115307	1	EA	CABLE ASSY, 480V HOPPER SSR
14	810263	1	EA	CB,25A 480V 3P, AIRPAX
13	102646	6	FT	SLVG, SI RBR/FGLS, BLACK, 1/2
12	N07061	2	FT	SLVG, SI RBR/FGLS, BLACK, #2
11	042X131	5	FT	WIRE, TFE, 16AWG, 260C BLK
10	802821	5	FT	WIRE, GREEN/YELLOW, 14G, 105C
9	802825	7	FT	WIRE, THHN, 10GA, LT BLUE
8	N05860	16	FT	WIRE, THHN, 14GA, BLACK
7	116268	1	EA	SSR, 480V, 50A, SINGLE, DC-IN
6	103379	2	EA	TERM BLK, 50A
5	812419	6	EA	FUSE LPCC 10A
4	0481126	6	EA	FUSE BLOCK, 600V 10A, DIN-RAIL
3	104161	4	EA	TERM, 105A, 600V, 4AWG
2	103663	1	EA	TERM BLK, #6, GND, DIN MOUNT
1	115047	2	EA	XFMR,1.8KVA,480/400 – 240

UNLESS OTHERWISE SPECIFIED DIMENSIONS ARE IN INCHES. TOLERANCES ARE: DECIMALS .XX = ±.010 .XXX = ±.005 ANGLES ±.5

FOR MACHINING STANDARDS AND SYMBOLS, SEE ITW/DYNATEC SPEC. A05800

ITW Dynatec HENDERSONVILLE, TN

U/M: EA

WIRING DIAGRAM
4 HOSE/HEADS W/GRID
480VAC

STATUS: R

SOURCE:

USED ON:

NEXT ASSY.:

APPROVALS: DRAWN CRF — DATE 12.3.08

CHECKED:

COMPUTER DESCRIPTION(25 CHARACTERS): SCHEM,480V,4H,XFORMER

SIZE: D — DWG. NO. 115313 — REV. L — GROUP:

DO NOT SCALE DRAWING — SCALE N.T.S. — CAD DRAWING — SHEET 1 of 1

THIS DRAWING IS THE PROPERTY OF ITW/DYNATEC.
DO NOT REPRODUCE OR DISCLOSE TO
OTHERS WITHOUT EXPRESS WRITTEN
CONSENT OF ITW/DYNATEC.

18117	J	ADDED CONTACTOR,ITEM 22	09.25.18	BFQ
1103	K	REVISED CONTACTOR	10.15.20	JJB
21-1594	L	CHANGE QTY OF ITEM 17	05.26.21	JJB

REVISIONS

REL.	REV.	DESCRIPTION	DATE	BY	APPROVED
N09037	A	ORIGINAL RELEASE	5.13.09	CRF	
09154	B	ADD JNCTN BOX DETAIL	6.11.09	CRF	
09239	C	ADD LABELS L1,L2,L3,L1A,L2A,&L3A ADD GRND FROM PE TO TERM	9.8.09	CRF	
10114	D	CHNG WIRE COLOR 480/400 TAPS CHNG SSR 810262 TO 116268	7.23.10	CRF	
10307	E	ITEM 19 WAS N05889	2.18.11	BB	
16038	F	SECOND.NEUTR.GROUND, NO FUSE	5.24.16	DH	
16056		UPDATE BOM	8.10.16	JC	
C1022	G	ADDED COMMENT 2	7.16.18	DLR	
C1109	H	CHANGED GND TO 14AWG	09.13.18	BFQ	

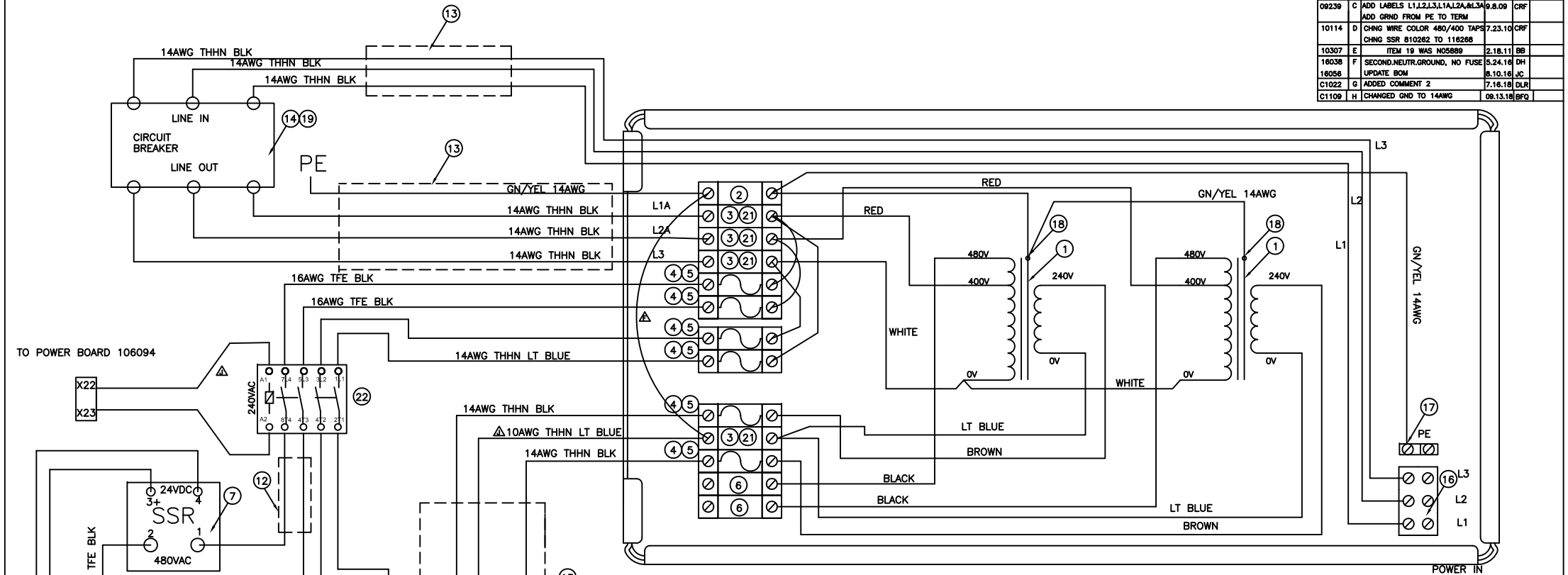

NOTES:
1. TORQUE ALL ELECTRICAL CONNECTIONS AS FOLLOWS:
   ITEM 2 – 35 IN-LB OR 4.0 NM
   ITEM 3 – 14 IN-LB OR 1.6 NM
   ITEM 4 – 22 IN-LB OR 2.5 NM
   ITEM 6 – 35 IN-LB OR 4.0 NM
   ITEM 7
   DC INPUT 10 IN-LB OR 1.1 NM
   AC OUTPUT 20 IN-LB OR 2.3 NM
2. WIRES TO HOPPER AND GRID ARE TO BE 16AWG TFE
3. CONTACTOR,ITEM22,PLACED INSIDE TRANSFORMER ENCLOSURE
4. CONTACTOR SET TO NORMALLY OPEN

ITEM	PART NUMBER	QTY.	U/M	DESCRIPTION
22	122703	1	EA	CONTACTOR,240VAC COIL
21	104162	4	EA	ENDPLATE,FOR PN 104161
20	106613	1	EA	CONN IDC, 4 PIN
19	N01460	6	EA	RING TERM
18	N04281	3	EA	RING TERM
17	105562	2	EA	GROUND LUG
16	115381	1	EA	TERM BLOCK, 3 POLE, 85A
15	115307	1	EA	CABLE ASSY, 480V HOPPER SSR
14	810263	1	EA	CB,25A 480V 3P, AIRPAX
13	102646	6	FT	SLVG, SI RBR/FGLS, BLACK, 1/2
12	N07061	2	FT	SLVG, SI RBR/FGLS, BLACK, #2
11	042X131	5	FT	WIRE, TFE, 16AWG, 260C BLK
10	802821	5	FT	WIRE, GREEN/YELLOW, 14G, 105C
9	802825	7	FT	WIRE, THHN, 10GA, LT BLUE
8	N05860	16	FT	WIRE, THHN, 14GA, BLACK
7	116268	1	EA	SSR, 480V, 50A, SINGLE, DC-IN
6	103379	2	EA	TERM BLK, 50A
5	812419	6	EA	FUSE LPCC 10A
4	048I126	6	EA	FUSE BLOCK, 600V 10A, DIN-RAIL
3	104161	4	EA	TERM, 105A, 600V, 4AWG
2	103663	1	EA	TERM BLK, #6, GND, DIN MOUNT
1	115047	2	EA	XFMR,1.8KVA,480/400 – 240

UNLESS OTHERWISE SPECIFIED DIMENSIONS ARE IN INCHES. TOLERANCES ARE: .XX = ±.010 .XXX = ±.005 ANGLES ±.5

USED ON

NEXT ASSY.

DO NOT SCALE DRAWING

FOR MACHINING STANDARDS AND SYMBOLS, SEE ITW/DYNATEC SPEC. A05800

APPROVALS	DATE
DRAWN CRF	12.3.08
CHECKED	

COMPUTER DESCRIPTION(20 CHARACTERS): SCHEM,400V,4H,XFORMER

ITW Dynatec HENDERSONVILLE, TN

WIRING DIAGRAM
4 HOSE/HEADS W/GRID
400VAC

U/M: EA
STATUS: R
SOURCE:

SIZE: D DWG. NO. 115315 REV. L GROUP
SCALE N.T.S.I CAD DRAWING SHEET 1 of 1

THIS DRAWING IS THE PROPERTY OF ITW/DYNATEC. DO NOT REPRODUCE OR DISCLOSE TO OTHERS WITHOUT EXPRESS WRITTEN CONSENT OF ITW/DYNATEC.

18117	J	ADDED CONTACTOR,ITEM 22	09.25.18	BFQ	
ECN669	K	REV XF SEC. WIRE COLORS CORRECT 0V SEC. WIRING	10.25.19	DJT	
1103	L	REVISED CONTACTOR	10.15.20	JJB	
21-1594	M	CHANGED QTY OF ITEM 17	05.26.21	JJB	

10114	D	DELETE EXTRANEOUS TEXT CHNG SSR 810262 TO 116268	7.23.10	CRF	
10307	E	ITEM 19 WAS N05889	2.18.11	BB	
16038	F	SECOND.NEUTR.GROUND,NO FUSE	5.24.16	DH	
16056		UPDATE BOM	8.10.16	JC	
C1022	G	ADDED COMMENT 2	7.16.18	DLR	
C1109	H	CHANGED GND TO 14AWG	09.13.18	BFQ	

REVISIONS

REL.	REV.	DESCRIPTION	DATE	BY	APPROVED
N09037	A	ORIGINAL RELEASE	5.13.09	CRF	
09154	B	ADD JNCTN BOX DETAIL	6.11.09	CRF	
09239	C	ADD LABELS L1,L2,L3,L1A,L2A,&L3A ADD GRND FROM PE TO TERM	9.8.09	CRF	
10114	D	DELETE EXTRANEOUS TEXT	4.22.10	CRF	

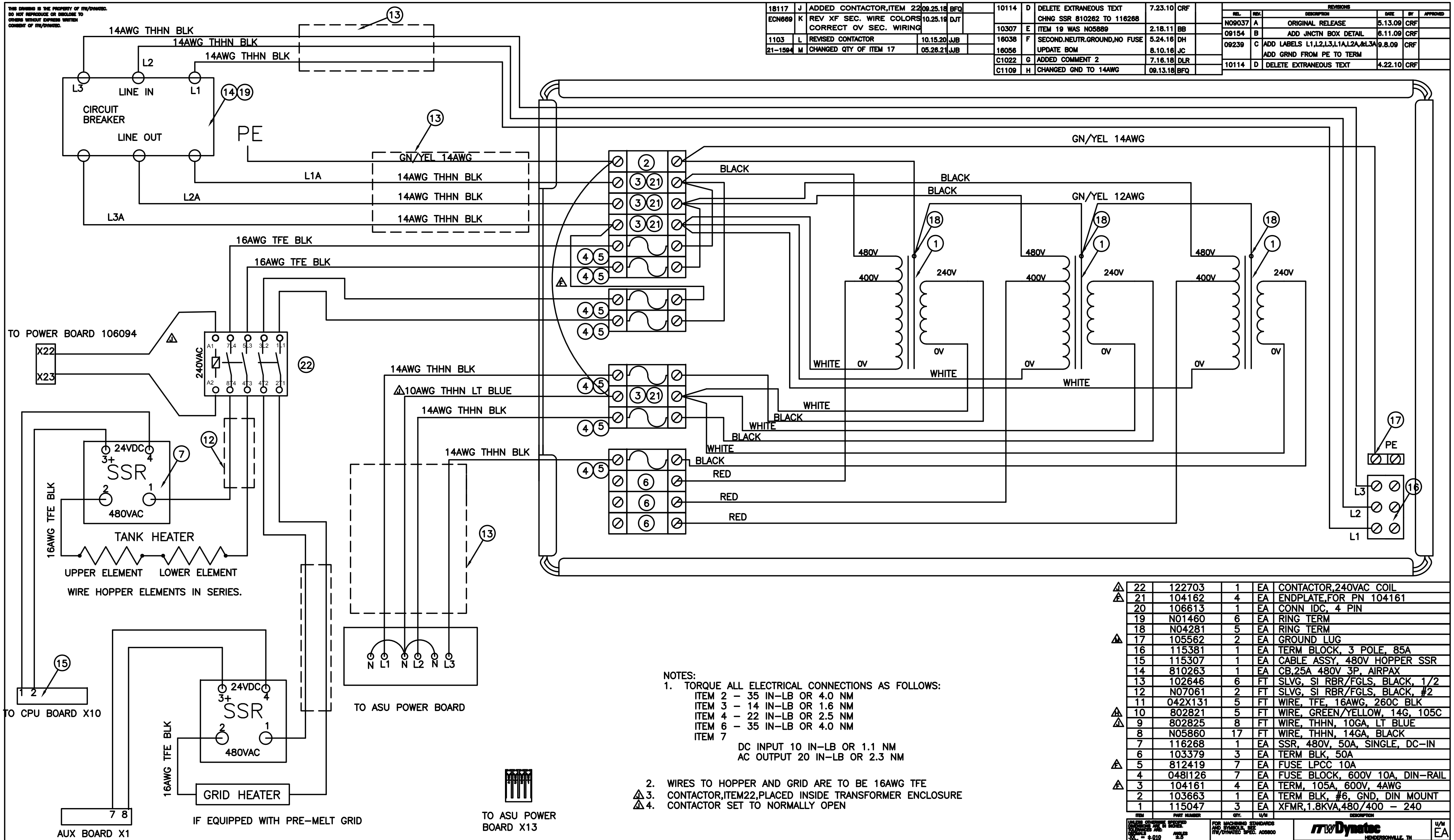

NOTES:

1. TORQUE ALL ELECTRICAL CONNECTIONS AS FOLLOWS:
   - ITEM 2 – 35 IN-LB OR 4.0 NM
   - ITEM 3 – 14 IN-LB OR 1.6 NM
   - ITEM 4 – 22 IN-LB OR 2.5 NM
   - ITEM 6 – 35 IN-LB OR 4.0 NM
   - ITEM 7
     - DC INPUT 10 IN-LB OR 1.1 NM
     - AC OUTPUT 20 IN-LB OR 2.3 NM
2. WIRES TO HOPPER AND GRID ARE TO BE 16AWG TFE
3. △ CONTACTOR,ITEM22,PLACED INSIDE TRANSFORMER ENCLOSURE
4. △ CONTACTOR SET TO NORMALLY OPEN

	ITEM	PART NUMBER	QTY.	U/M	DESCRIPTION
△	22	122703	1	EA	CONTACTOR,240VAC COIL
△	21	104162	4	EA	ENDPLATE,FOR PN 104161
	20	106613	1	EA	CONN IDC, 4 PIN
	19	N01460	6	EA	RING TERM
	18	N04281	5	EA	RING TERM
△	17	105562	2	EA	GROUND LUG
	16	115381	1	EA	TERM BLOCK, 3 POLE, 85A
	15	115307	1	EA	CABLE ASSY, 480V HOPPER SSR
	14	810263	1	EA	CB,25A 480V 3P, AIRPAX
	13	102646	6	FT	SLVG, SI RBR/FGLS, BLACK, 1/2
	12	N07061	2	FT	SLVG, SI RBR/FGLS, BLACK, #2
	11	042X131	5	FT	WIRE, TFE, 16AWG, 260C BLK
△	10	802821	5	FT	WIRE, GREEN/YELLOW, 14G, 105C
△	9	802825	8	FT	WIRE, THHN, 10GA, LT BLUE
	8	N05860	17	FT	WIRE, THHN, 14GA, BLACK
	7	116268	1	EA	SSR, 480V, 50A, SINGLE, DC-IN
	6	103379	3	EA	TERM BLK, 50A
△	5	812419	7	EA	FUSE LPCC 10A
	4	0481126	7	EA	FUSE BLOCK, 600V 10A, DIN-RAIL
△	3	104161	4	EA	TERM, 105A, 600V, 4AWG
	2	103663	1	EA	TERM BLK, #6, GND, DIN MOUNT
	1	115047	3	EA	XFMR,1.8KVA,480/400 – 240

UNLESS OTHERWISE SPECIFIED DIMENSIONS ARE IN INCHES. TOLERANCES ARE: DECIMALS .XX = ±.010 .XXX = ±.005 ANGLES ±.5	FOR MACHINING STANDARDS AND SYMBOLS, SEE ITW/DYNATEC SPEC. A05800	ITW Dynatec HENDERSONVILLE, TN	U/M EA
USED ON	APPROVALS / DATE — DRAWN CRF 12.3.08 — CHECKED	WIRING DIAGRAM 6 HOSE/HEADS W/GRID 480VAC	STATUS R
NEXT ASSY.	COMPUTER DESCRIPTION(25 CHARACTERS) SCHEM,480V,6H,XFORMER	SIZE D — DWG. NO. 115317 — REV. M	SOURCE / GROUP
DO NOT SCALE DRAWING		SCALE N.T.S. — CAD DRAWING — SHEET 1 of 1	

THIS DRAWING IS THE PROPERTY OF ITW/DYNATEC.
DO NOT REPRODUCE OR DISCLOSE TO
OTHERS WITHOUT EXPRESS WRITTEN
CONSENT OF ITW/DYNATEC.

18117	J	ADDED CONTACTOR,ITEM 22	09.25.18	BFQ
ECN669	K	REV XF SEC. WIRE COLORS CORRECT 0V SEC. WIRING	10.25.19	DJT
1103	L	REVISED CONTACTOR	10.15.20	JJB
21-1594	M	CHANGED QTY OF ITEM 17	05.26.21	JJB

10114	D	DELETE EXTRANOUS TEXT CHNG SSR 810262 TO 116268	7.23.10	CRF
10307	E	ITEM 19 WAS N05889	2.18.11	BB
16038	F	SECOND.NEUTR.GROUND,NO FUSE	5.24.16	DH
16056		UPDATE BOM	8.10.16	JC
C1022	G	ADDED COMMENT 2	7.16.18	DLR
C1109	H	CHANGED GND TO 14AWG	09.13.18	BFQ

REVISIONS

REL.	REV.	DESCRIPTION	DATE	BY	APPROVED
N09037	A	ORIGINAL RELEASE	5.13.09	CRF	
09154	B	ADD JNCTN BOX DETAIL	6.11.09	CRF	
09239	C	ADD LABELS L1,L2,L3,L1A,L2A,&L3A ADD GRND FROM PE TO TERM	6.11.09	CRF	
10114	D	DELETE EXTRANOUS TEXT	4.22.10	CRF	
10114	D	DELETE EXTRANOUS TEXT	4.22.10	CRF	

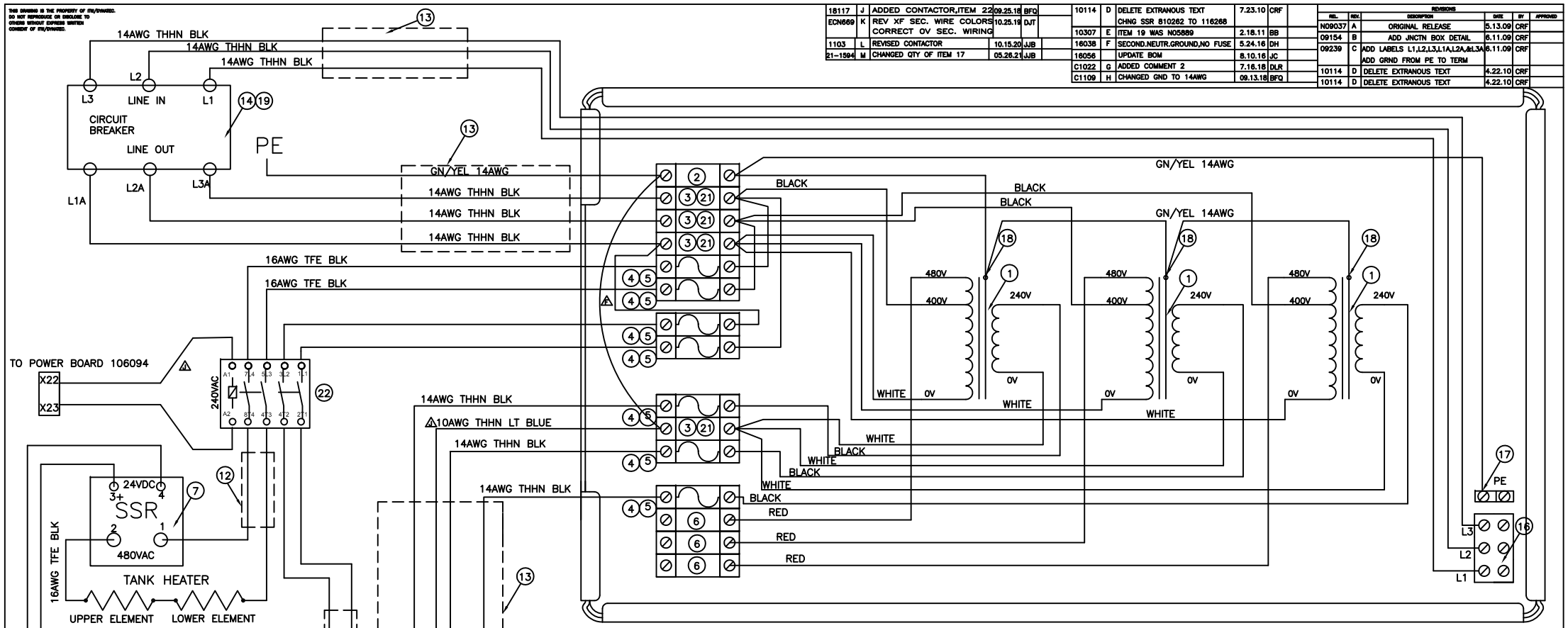

NOTES:
1. TORQUE ALL ELECTRICAL CONNECTIONS AS FOLLOWS:
   ITEM 2 – 35 IN-LB OR 4.0 NM
   ITEM 3 – 14 IN-LB OR 1.6 NM
   ITEM 4 – 22 IN-LB OR 2.5 NM
   ITEM 6 – 35 IN-LB OR 4.0 NM
   ITEM 7
   DC INPUT 10 IN-LB OR 1.1 NM
   AC OUTPUT 20 IN-LB OR 2.3 NM
2. WIRES TO HOPPER AND GRID ARE TO BE 16AWG TFE
3. CONTACTOR,ITEM22,PLACED INSIDE TRANSFORMER ENCLOSURE
4. CONTACTOR SET TO NORMALLY OPEN

ITEM	PART NUMBER	QTY.	U/M	DESCRIPTION
22	122703	1	EA	CONTACTOR,240VAC COIL
21	104162	4	EA	ENDPLATE,FOR PN 104161
20	106613	1	EA	CONN IDC, 4 PIN
19	N01460	6	EA	RING TERM
18	N04281	5	EA	RING TERM
17	105562	2	EA	GROUND LUG
16	115381	1	EA	TERM BLOCK, 3 POLE, 85A
15	115307	1	EA	CABLE ASSY, 480V HOPPER SSR
14	810263	1	EA	CB,25A 480V 3P, AIRPAX
13	102646	6	FT	SLVG, SI RBR/FGLS, BLACK, 1/2
12	N07061	2	FT	SLVG, SI RBR/FGLS, BLACK, #2
11	042X131	5	FT	WIRE, TFE, 16AWG, 260C BLK
10	802821	5	FT	WIRE, GREEN/YELLOW, 14G, 105C
9	802825	8	FT	WIRE, THHN, 10GA, LT BLUE
8	N05860	17	FT	WIRE, THHN, 14GA, BLACK
7	116268	1	EA	SSR, 480V, 50A, SINGLE, DC-IN
6	103379	3	EA	TERM BLK, 50A
5	812419	7	EA	FUSE LPCC 10A
4	048I126	7	EA	FUSE BLOCK, 600V 10A, DIN-RAIL
3	104161	4	EA	TERM, 105A, 600V, 4AWG
2	103663	1	EA	TERM BLK, #6, GND, DIN MOUNT
1	115047	3	EA	XFMR,1.8KVA,480/400 – 240

UNLESS OTHERWISE SPECIFIED DIMENSIONS ARE IN INCHES. TOLERANCES ARE: .XX = ±.010 .XXX = ±.005 ANGLES ±2°

FOR MACHINING STANDARDS AND SYMBOLS, SEE ITW/DYNATEC SPEC. A05800

USED ON

NEXT ASSY.

DO NOT SCALE DRAWING

APPROVALS	DATE
DRAWN CRF	12.3.08
CHECKED	

COMPUTER DESCRIPTION(25 CHARACTERS) SCHEM,400V,6H,XFORMER

ITW Dynatec
HENDERSONVILLE, TN

WIRING DIAGRAM
6 HOSE/HEADS W/GRID
400VAC

U/M EA
STATUS R
SOURCE

SIZE D DWG. NO. 115319 REV M GROUP

SCALE N.T.S.I CAD DRAWING SHEET 1 of 1

THIS DRAWING IS THE PROPERTY OF ITW/DYNATEC.
DO NOT REPRODUCE OR DISCLOSE TO
OTHERS WITHOUT EXPRESS WRITTEN
CONSENT OF ITW/DYNATEC.

DWG. NO.	SH	REV.
115404	1	C

REVISIONS

REL.	REV.	DESCRIPTION	DATE	BY	APPROVED
09185	A	ORIGINAL RELEASE	7.20.09	CRF	
10094	B	ADDED ITEM 15 AND NOTE 1	4.1.10	BB	
10307	C	ADDED ITEMS 16, 17, 18	2.17.11	BB	

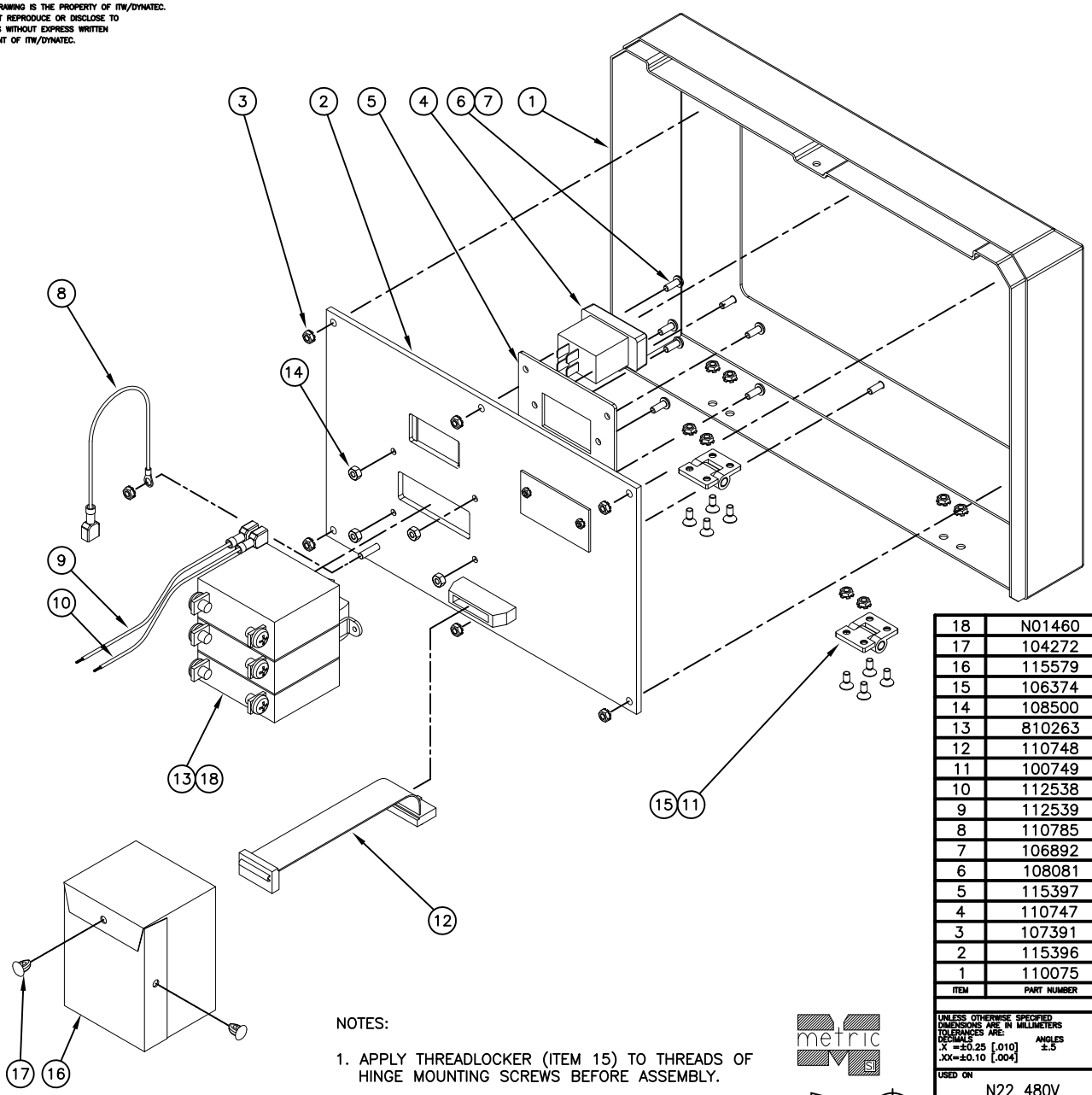

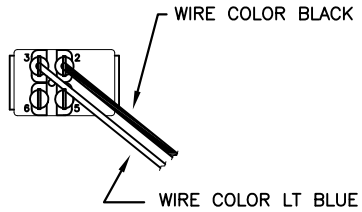

PUMP SWITCH & WIRE
INSTALLATION DETAIL

ITEM	PART NUMBER	QTY.	U/M	DESCRIPTION
18	N01460	6	EA	RING TERMINAL
17	104272	2	EA	CLIP
16	115579	1	EA	COVER, CB
15	106374	A/N	EA	ADH/SLNT, THREADLOCKER, BLUE
14	108500	4	EA	NUT, M3, KEPS
13	810263	1	EA	CB, 25A, 480V, 3P, AIRPAX
12	110748	1	EA	CABLE ASSY, KEYPAD/DISPLAY
11	100749	2	EA	HINGE
10	112538	1	EA	WIRE, PUMP SWITCH, BLACK
9	112539	1	EA	WIRE, PUMP, LT BLUE
8	110785	1	EA	WIRE, GROUND
7	106892	6	EA	WASHER, M3, FLAT, BLK
6	108081	6	EA	SCREW, BTN HD, M3X8, BLK
5	115397	1	EA	PLATE, CB SWITCH MOUNT
4	110747	1	EA	SWITCH, DPDT, ROCKER, SEALED
3	107391	7	EA	NUT, HEX, M4x0.7, w/LOCKWASHER
2	115396	1	EA	CONTROL PANEL N22 480V
1	110075	1	EA	PANEL, FRONT

PARTS LIST

NOTES:

1. APPLY THREADLOCKER (ITEM 15) TO THREADS OF HINGE MOUNTING SCREWS BEFORE ASSEMBLY.

metric SI

SI

UNLESS OTHERWISE SPECIFIED DIMENSIONS ARE IN MILLIMETERS
TOLERANCES ARE:
DECIMALS .X =±0.25 [.010] .XX=±0.10 [.004]
ANGLES ±.5

USED ON: N22 480V

NEXT ASSY.

DO NOT SCALE DRAWING

FOR MACHINING STANDARDS AND SYMBOLS, SEE ITW/DYNATEC SPEC. A05800

APPROVALS	DATE
DRAWN CRF	6.17.09
CHECKED	

COMPUTER DESCRIPTION(24 CHARACTERS): PANEL ASY,FRNT,N22 480V

ITW Dynatec HENDERSONVILLE, TN

U/M EA

FRONT PANEL ASSY, N22 480V ASU

STATUS

SOURCE

SIZE C | DWG. NO. 115404 | REV. C | GROUP

SCALE 1:1 CAD DRAWING SHEET 1 of 1

THIS DRAWING IS THE PROPERTY OF ITW/DYNATEC. DO NOT REPRODUCE OR DISCLOSE TO OTHERS WITHOUT EXPRESS WRITTEN CONSENT OF ITW/DYNATEC.

DWG. NO. 115392	SH 1	REV. E			
REVISIONS					
REL.	REV.	DESCRIPTION	DATE	BY	APPROVED
09185	A	ORIGINAL RELEASE	7.20.09	CRF	
09239	B	ADD LABELS L1,L2,L3,L1A,L2A,&L3A ADD GRND FROM PE TO TERM	9.8.09	CRF	
10114	C	CHNG CPU BOARD TO X14 ON ITEM 15; ADD 116187 JUMPER TO X2; CHNG BLK AND RED WIRES CHNG SSR 810262 TO 116268	7.23.10	CRF	
10307	D	ITEM 19 WAS N05889 ITEM 15 WAS 115307	2.18.11	BB	
16038 16056	E	SECOND.NEUTR.GROUND. NO FUSE UPDATE BOM	5.24.16 8.10.16	DH JC	

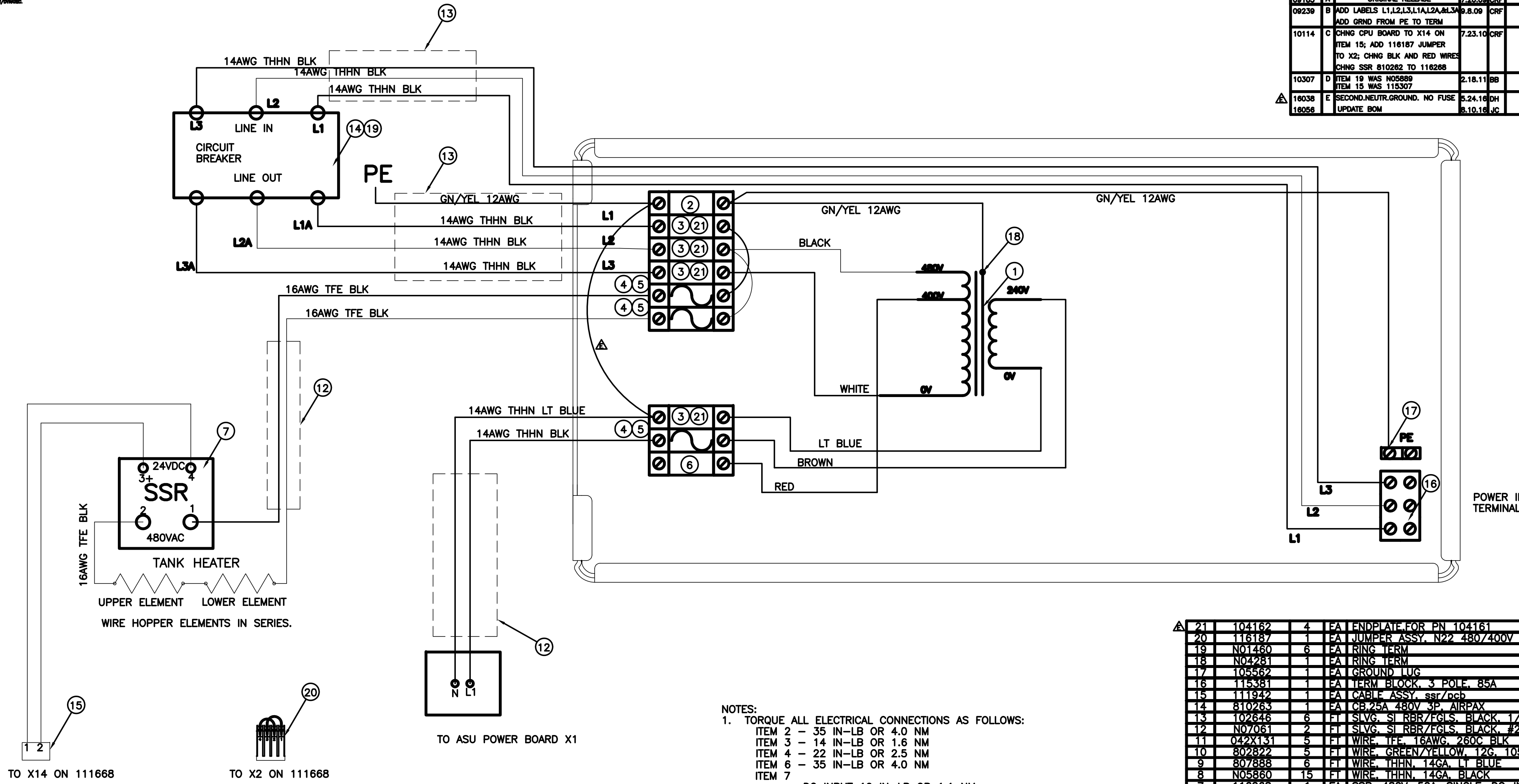

NOTES:
1. TORQUE ALL ELECTRICAL CONNECTIONS AS FOLLOWS:
   ITEM 2 – 35 IN-LB OR 4.0 NM
   ITEM 3 – 14 IN-LB OR 1.6 NM
   ITEM 4 – 22 IN-LB OR 2.5 NM
   ITEM 6 – 35 IN-LB OR 4.0 NM
   ITEM 7
   DC INPUT 10 IN-LB OR 1.1 NM
   AC OUTPUT 20 IN-LB OR 2.3 NM
2. WIRES TO HOPPER AND GRID ARE TO BE 16AWG TFE

ITEM	PART NUMBER	QTY.	U/M	DESCRIPTION
21	104162	4	EA	ENDPLATE,FOR PN 104161
20	116187	1	EA	JUMPER ASSY, N22 480/400V
19	N01460	6	EA	RING TERM
18	N04281	1	EA	RING TERM
17	105562	1	EA	GROUND LUG
16	115381	1	EA	TERM BLOCK, 3 POLE, 85A
15	111942	1	EA	CABLE ASSY, ssr/pcb
14	810263	1	EA	CB,25A 480V 3P, AIRPAX
13	102646	6	FT	SLVG, SI RBR/FGLS, BLACK, 1/2
12	N07061	2	FT	SLVG, SI RBR/FGLS, BLACK, #2
11	042X131	5	FT	WIRE, TFE, 16AWG, 260C BLK
10	802822	5	FT	WIRE, GREEN/YELLOW, 12G, 105C
9	807888	6	FT	WIRE, THHN, 14GA, LT BLUE
8	N05860	15	FT	WIRE, THHN, 14GA, BLACK
7	116268	1	EA	SSR, 480V, 50A, SINGLE, DC-IN
6	103379	1	EA	TERM BLK, 50A
5	812419	3	EA	FUSE LPCC 10A
4	048I126	3	EA	FUSE BLOCK, 600V 10A, DIN-RAIL
3	104161	4	EA	TERM, 105A, 600V, 4AWG
2	103663	1	EA	TERM BLK, #6, GND, DIN MOUNT
1	115047	1	EA	XFMR,1.8KVA,480/400 – 240

UNLESS OTHERWISE SPECIFIED DIMENSIONS ARE IN INCHES. TOLERANCES ARE: DECIMALS .XX = ±.010 .XXX = ±.005 ANGLES ±.5

FOR MACHINING STANDARDS AND SYMBOLS, SEE ITW/DYNATEC SPEC. A05800

ITW Dynatec HENDERSONVILLE, TN

APPROVALS		DATE
DRAWN	CRF	6.12.09
CHECKED		

USED ON

NEXT ASSY.

COMPUTER DESCRIPTION(25 CHARACTERS): SCHEM,480V,2H,XFMR,N22

WIRING DIAGRAM
2 HOSE/HEADS N22
480VAC

U/M: EA | STATUS: R | SOURCE: | GROUP:

SIZE: D | DWG. NO. 115392 | REV. E

SCALE N.T.S. | CAD DRAWING | SHEET 1 of 1

DO NOT SCALE DRAWING

THIS DRAWING IS THE PROPERTY OF ITW/DYNATEC.
DO NOT REPRODUCE OR DISCLOSE TO
OTHERS WITHOUT EXPRESS WRITTEN
CONSENT OF ITW/DYNATEC.

DWG. NO. 115394	SH 1	REV. E

REVISIONS

REL.	REV.	DESCRIPTION	DATE	BY	APPROVED
09185	A	ORIGINAL RELEASE	7.20.09	CRF	
09239	B	ADD LABELS L1,L2,L3,L1A,L2A,&L3A ADD GRND FROM PE TO TERM	9.8.09	CRF	
10114	C	CHNG CPU BOARD TO X14 ON ITEM 15; ADD 116187 JUMPER TO X2; CHNG BLK AND RED WIRES CHNG SSR 810262 TO 116268	7.23.10	CRF	
10307	D	ITEM 19 WAS N05889	2.18.11	BB	
E 16038	E	SECOND.NEUTR.GROUND. NO FUSE	5.24.16	DH	
16056		UPDATE BOM	8.10.16	JC	

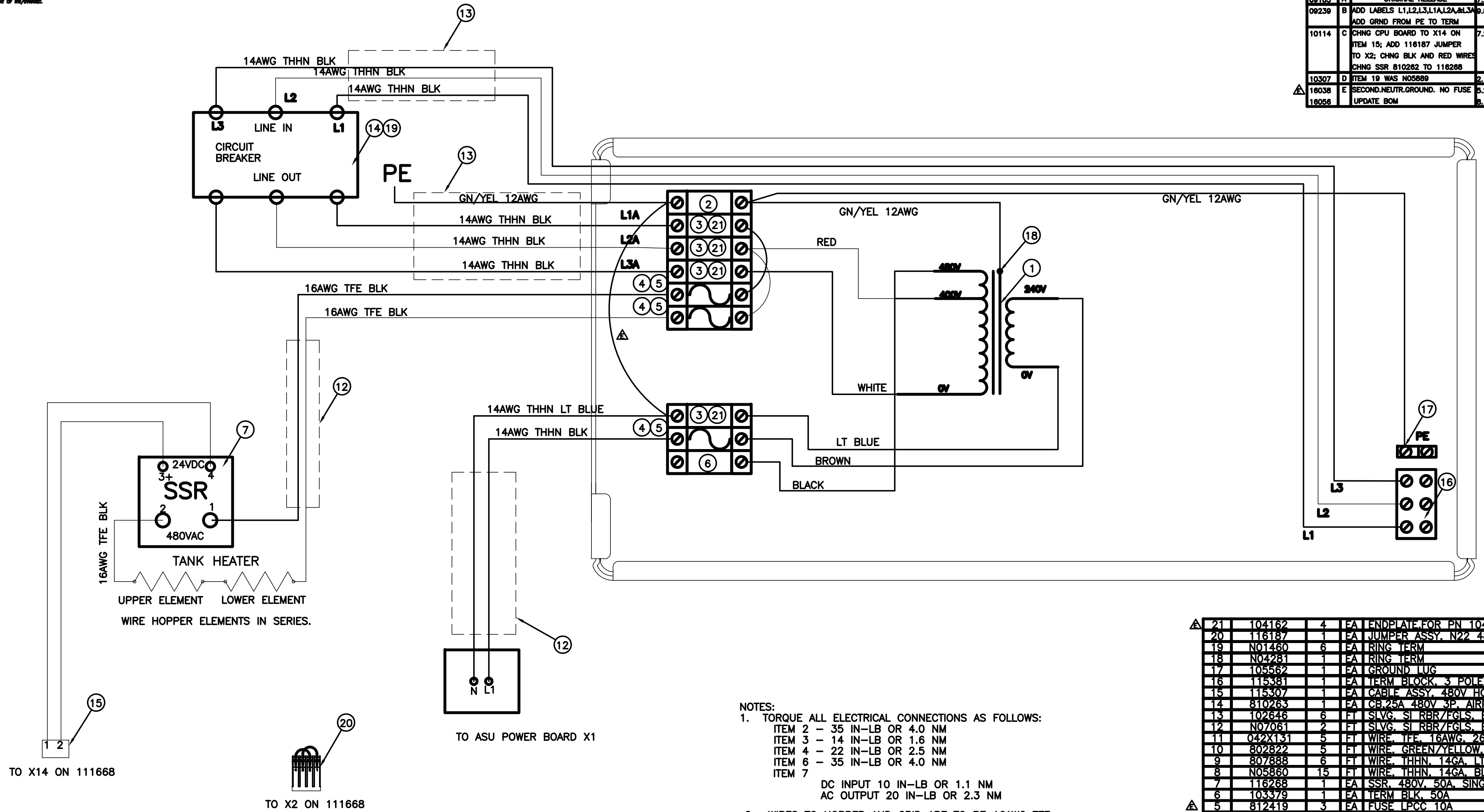

NOTES:

1. TORQUE ALL ELECTRICAL CONNECTIONS AS FOLLOWS:
   ITEM 2 – 35 IN–LB OR 4.0 NM
   ITEM 3 – 14 IN–LB OR 1.6 NM
   ITEM 4 – 22 IN–LB OR 2.5 NM
   ITEM 6 – 35 IN–LB OR 4.0 NM
   ITEM 7
   DC INPUT 10 IN–LB OR 1.1 NM
   AC OUTPUT 20 IN–LB OR 2.3 NM
2. WIRES TO HOPPER AND GRID ARE TO BE 16AWG TFE

	ITEM	PART NUMBER	QTY.	U/M	DESCRIPTION
E	21	104162	4	EA	ENDPLATE,FOR PN 104161
	20	116187	1	EA	JUMPER ASSY, N22 480/400V
	19	N01460	6	EA	RING TERM
	18	N04281	1	EA	RING TERM
	17	105562	1	EA	GROUND LUG
	16	115381	1	EA	TERM BLOCK, 3 POLE, 85A
	15	115307	1	EA	CABLE ASSY, 480V HOPPER SSR
	14	810263	1	EA	CB,25A 480V 3P, AIRPAX
	13	102646	6	FT	SLVG, SI RBR/FGLS, BLACK, 1/2
	12	N07061	2	FT	SLVG, SI RBR/FGLS, BLACK, #2
	11	042X131	5	FT	WIRE, TFE, 16AWG, 260C BLK
	10	802822	5	FT	WIRE, GREEN/YELLOW, 12G, 105C
	9	807888	6	FT	WIRE, THHN, 14GA, LT BLUE
	8	N05860	15	FT	WIRE, THHN, 14GA, BLACK
	7	116268	1	EA	SSR, 480V, 50A, SINGLE, DC–IN
	6	103379	1	EA	TERM BLK, 50A
E	5	812419	3	EA	FUSE LPCC 10A
	4	048I126	3	EA	FUSE BLOCK, 600V 10A, DIN–RAIL
E	3	104161	4	EA	TERM, 105A, 600V, 4AWG
	2	103663	1	EA	TERM BLK, #6, GND, DIN MOUNT
	1	115047	1	EA	XFMR,1.8KVA,480/400 – 240

UNLESS OTHERWISE SPECIFIED DIMENSIONS ARE IN INCHES. TOLERANCES ARE: DECIMALS .XX = ±.010 .XXX = ±.005 ANGLES ±.5

FOR MACHINING STANDARDS AND SYMBOLS, SEE ITW/DYNATEC SPEC. A05800

USED ON

NEXT ASSY.

DO NOT SCALE DRAWING

APPROVALS		DATE
DRAWN	CRF	6.12.09
CHECKED		

COMPUTER DESCRIPTION(25 CHARACTERS): SCHEM,480V,2H,XFMR,N22

ITW Dynatec
HENDERSONVILLE, TN

WIRING DIAGRAM 2 HOSE/HEADS N22 400VAC

U/M: EA
STATUS: R
SOURCE:
SIZE: D
DWG. NO. 115394
REV. E
GROUP:
SCALE N.T.S. CAD DRAWING SHEET 1 of 1

THIS DRAWING IS THE PROPERTY OF ITW/DYNATEC.
DO NOT REPRODUCE OR DISCLOSE TO
OTHERS WITHOUT EXPRESS WRITTEN
CONSENT OF ITW/DYNATEC.

DWG. NO. 115405	SH 1	REV. C			
REVISIONS					
REL.	REV.	DESCRIPTION	DATE	BY	APPROVED
09185	A	ORIGINAL RELEASE	7.20.09	CRF	
10094	B	ADDED ITEM 15 AND NOTE 1	4.1.10	BB	
10307	C	ADDED ITEMS 16, 17, 18	2.17.11	BB	

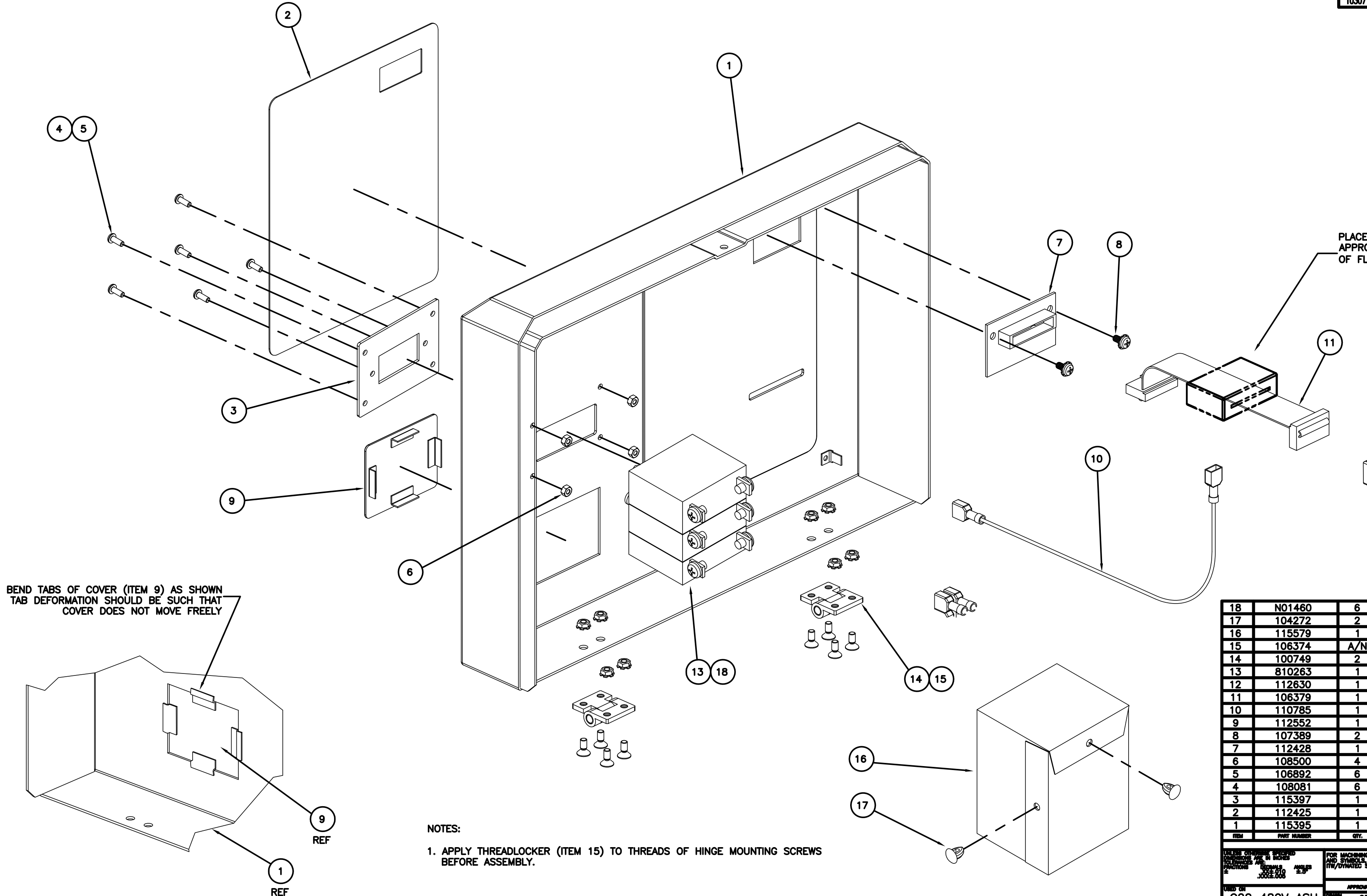

NOTES:

1. APPLY THREADLOCKER (ITEM 15) TO THREADS OF HINGE MOUNTING SCREWS BEFORE ASSEMBLY.

ITEM	PART NUMBER	QTY.	U/M	DESCRIPTION
18	N01460	6	EA	RING TERMINAL
17	104272	2	EA	CLIP
16	115579	1	EA	COVER, CB
15	106374	A/N	EA	ADH/SLNT, THREADLOCKER, BLUE
14	100749	2	EA	HINGE
13	810263	1	EA	CB, 25A, 480V 3P, AIRPAX
12	112630	1	EA	EMI CORE, SNAP-ON, FLAT
11	106379	1	EA	CABLE ASY, EXP PT, 1A
10	110785	1	EA	WIRE ASSY, GROUND
9	112552	1	EA	PLATE, COVER
8	107389	2	EA	SCREW, PHP, M4X8 W/WSHR
7	112428	1	EA	PCB ASSY, DISPLAY
6	108500	4	EA	NUT, M3, KEPS
5	106892	6	EA	WASHER, M3, FLAT, BLK
4	108081	6	EA	SCREW, BTN HD, M3X8, BLK
3	115397	1	EA	PLATE, CB SWITCH MOUNT
2	112425	1	EA	MEMBRANE SWITCH
1	115395	1	EA	FRONT PANEL C22 480V

PARTS LIST

UNLESS OTHERWISE SPECIFIED DIMENSIONS ARE IN INCHES TOLERANCES ARE:
FRACTIONS ± DECIMALS .XX±.010 .XXX±.005 ANGLES ±.5°

FOR MACHINING STANDARDS AND SYMBOLS, SEE ITW/DYNATEC SPEC. A05800

ITW Dynatec HENDERSONVILLE, TN

U/M: EA

USED ON: C22 480V ASU

NEXT ASSY.

APPROVALS — DRAWN: CRF, DATE: 6.17.09; CHECKED

FRONT PANEL ASSY, C22 480V

STATUS / SOURCE / GROUP

COMPUTER DESCRIPTION(24 CHARACTERS): FRONT PANEL ASY,C22 480V

SIZE: D | DWG. NO. 115405 | REV. C

SCALE 1:1 | CAD DRAWING | SHEET 1 of 1

DO NOT SCALE DRAWING

THIS DRAWING IS THE PROPERTY OF ITW/DYNATEC. DO NOT REPRODUCE OR DISCLOSE TO OTHERS WITHOUT EXPRESS WRITTEN CONSENT OF ITW/DYNATEC.

DWG. NO.	SH	REV.
115388	1	E

REVISIONS

REL.	REV.	DESCRIPTION	DATE	BY	APPROVED
10307	D	WAS "CPU BOARD", ADDED ITEMS 20 & 21, ITEM 15 WAS 115307 ITEM 19 WAS N05889	2.15.11	BB	
16038 16056	E	SECOND.NEUTR.GROUND. NO FUSE UPDATE BOM	5.24.16 6.10.16	DH JC	

REVISIONS

REL.	REV.	DESCRIPTION	DATE	BY	APPROVED
09185	A	ORIGINAL RELEASE	7.20.09	CRF	
09239	B	ADD LABELS L1,L2,L3,L1A,L2A,&L3A ADD GRND FROM PE TO TERM	9.8.09	CRF	
10114	C	CHNG SSR 810262 TO 116268	7.23.10	CRF	

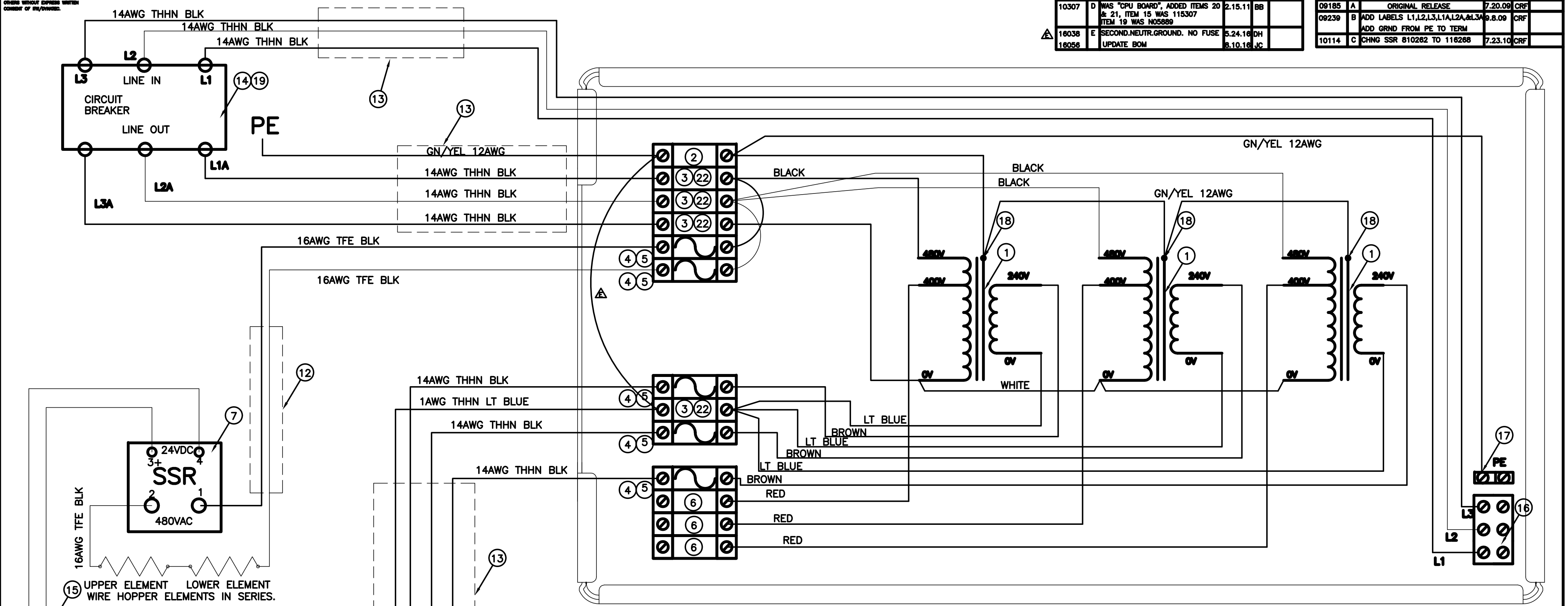

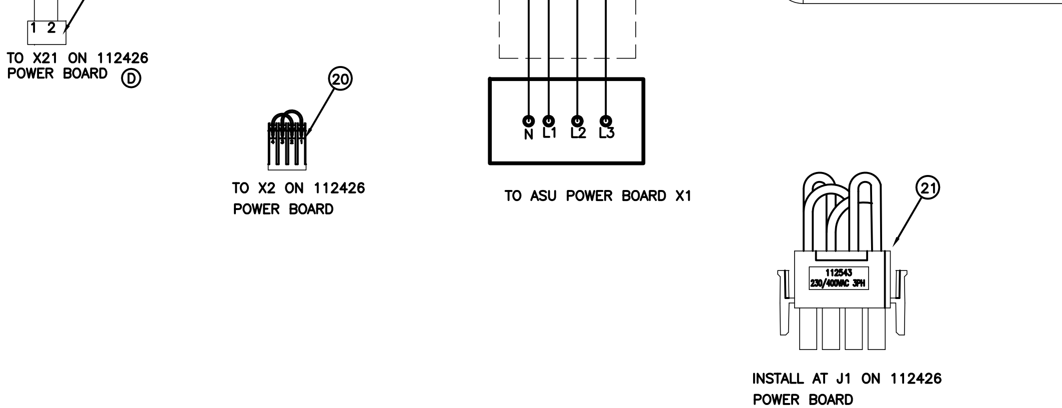

NOTES:
1. TORQUE ALL ELECTRICAL CONNECTIONS AS FOLLOWS:
   - ITEM 2 – 35 IN–LB OR 4.0 NM
   - ITEM 3 – 14 IN–LB OR 1.6 NM
   - ITEM 4 – 22 IN–LB OR 2.5 NM
   - ITEM 6 – 35 IN–LB OR 4.0 NM
   - ITEM 7
     - DC INPUT 10 IN–LB OR 1.1 NM
     - AC OUTPUT 20 IN–LB OR 2.3 NM

ITEM	PART NUMBER	QTY.	U/M	DESCRIPTION
22	104162	4	EA	ENDPLATE,FOR PN 104161
21	112543	1	EA	POWER CONFIGURATION PLUG
20	116187	1	EA	JUMPER ASSY. N22/N26/C22
19	N01460	6	EA	RING TERM
18	N04281	5	EA	RING TERM
17	105562	1	EA	GROUND LUG
16	115381	1	EA	TERM BLOCK, 3 POLE, 85A
15	111942	1	EA	CABLE ASSY. SSR/PCB
14	810263	1	EA	CB,25A 480V 3P, AIRPAX
13	102646	6	FT	SLVG. SI RBR/FGLS. BLACK, 1/2
12	N07061	2	FT	SLVG. SI RBR/FGLS. BLACK, #2
11	042X131	5	FT	WIRE, TFE, 16AWG, 260C BLK
10	802822	5	FT	WIRE, GREEN/YELLOW, 12G, 105C
9	807888	8	FT	WIRE, THHN, 14GA, LT BLUE
8	N05860	17	FT	WIRE, THHN, 14GA, BLACK
7	116268	1	EA	SSR, 480V, 50A, SINGLE, DC–IN
6	103379	3	EA	TERM BLK, 50A
5	812419	5	EA	FUSE LPCC 10A
4	048I126	5	EA	FUSE BLOCK, 600V 10A, DIN–RAIL
3	104161	4	EA	TERM, 105A, 600V, 4AWG
2	103663	1	EA	TERM BLK, #6, GND, DIN MOUNT
1	115047	3	EA	XFMR,1.8KVA,480/400 – 240

UNLESS OTHERWISE SPECIFIED DIMENSIONS ARE IN INCHES. TOLERANCES ARE: DECIMALS .XX = ±.010 .XXX = ±.005 ANGLES ±.5

FOR MACHINING STANDARDS AND SYMBOLS, SEE ITW/DYNATEC SPEC. A05800

USED ON

NEXT ASSY.

DO NOT SCALE DRAWING

APPROVALS	DATE
DRAWN CRF	6.12.09
CHECKED	

COMPUTER DESCRIPTION(25 CHARACTERS) SCHEM,480V,6H,XFMR,NC26

ITW Dynatec HENDERSONVILLE, TN

WIRING DIAGRAM
6 HOSE/HEADS
480VAC N26&C22

U/M EA | STATUS R | SOURCE | GROUP

SIZE D | DWG. NO. 115388 | REV. E

SCALE N.T.S. | CAD DRAWING | SHEET 1 of 1

THIS DRAWING IS THE PROPERTY OF ITW/DYNATEC. DO NOT REPRODUCE OR DISCLOSE TO OTHERS WITHOUT EXPRESS WRITTEN CONSENT OF ITW/DYNATEC.

DWG. NO.	SH	REV.
115390	1	E

REVISIONS

REL.	REV.	DESCRIPTION	DATE	BY	APPROVED
09185	A	ORIGINAL RELEASE	7.20.09	CRF	
09239	B	ADD LABELS L1,L2,L3,L1A,L2A,&L3A ADD GRND FROM PE TO TERM	9.8.09	CRF	
10114	C	CHNG WIRE COLORS. CHNG SSR 810262 TO 116268	7.23.10	CRF	
10307	D	WAS "CPU BOARD", ADDED ITEMS 20 & 21, ITEM 15 WAS 115307 ITEM 19 WAS N05889	2.15.11	BB	
16038 16056	E	SECOND.NEUTR.GROUND. NO FUSE UPDATE BOM	5.24.16 8.10.16	DH JC	

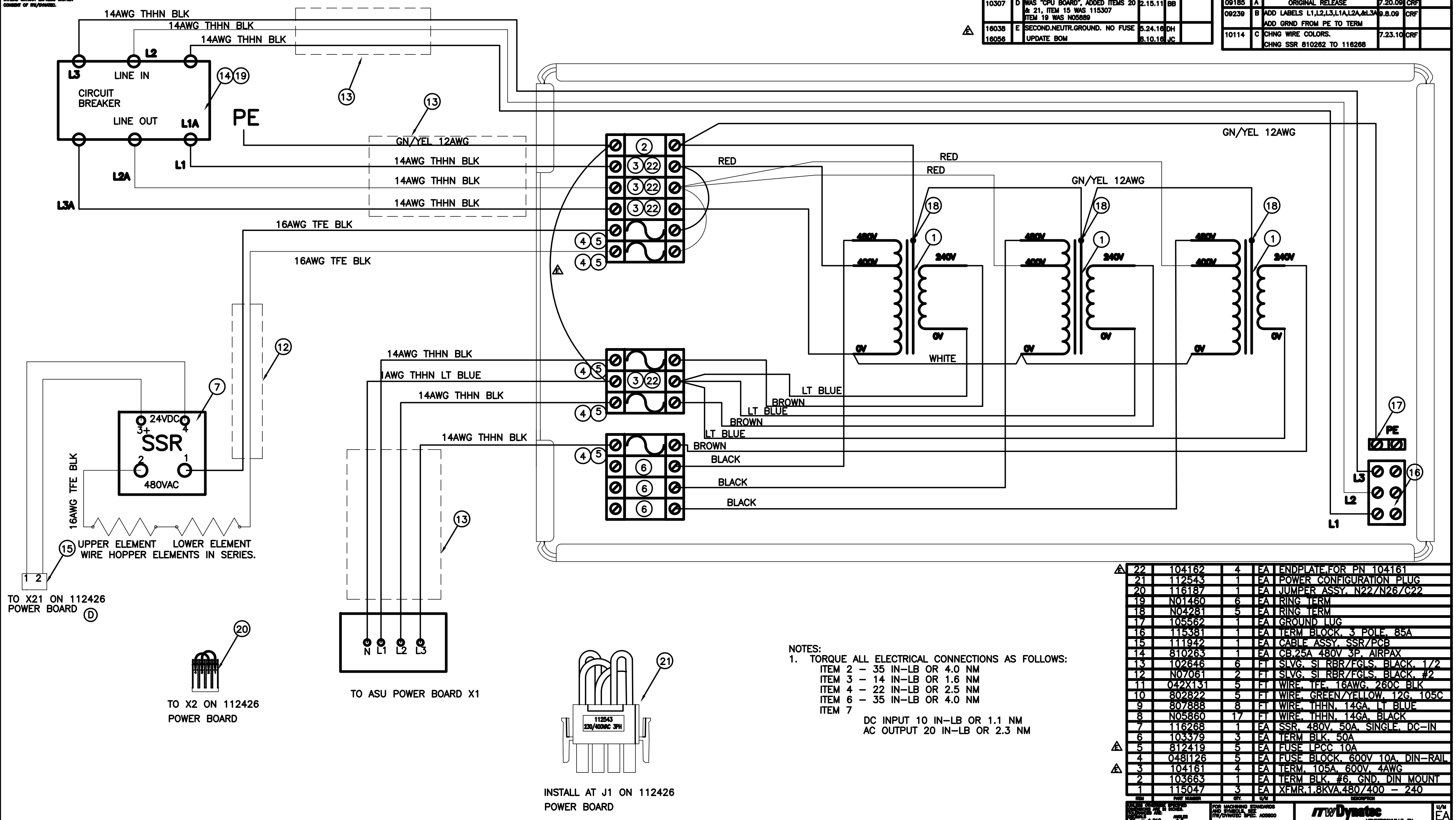

NOTES:

1. TORQUE ALL ELECTRICAL CONNECTIONS AS FOLLOWS:
   - ITEM 2 – 35 IN-LB OR 4.0 NM
   - ITEM 3 – 14 IN-LB OR 1.6 NM
   - ITEM 4 – 22 IN-LB OR 2.5 NM
   - ITEM 6 – 35 IN-LB OR 4.0 NM
   - ITEM 7
     - DC INPUT 10 IN-LB OR 1.1 NM
     - AC OUTPUT 20 IN-LB OR 2.3 NM

ITEM	PART NUMBER	QTY.	U/M	DESCRIPTION
22	104162	4	EA	ENDPLATE,FOR PN 104161
21	112543	1	EA	POWER CONFIGURATION PLUG
20	116187	1	EA	JUMPER ASSY, N22/N26/C22
19	N01460	6	EA	RING TERM
18	N04281	5	EA	RING TERM
17	105562	1	EA	GROUND LUG
16	115381	1	EA	TERM BLOCK, 3 POLE, 85A
15	111942	1	EA	CABLE ASSY, SSR/PCB
14	810263	1	EA	CB,25A 480V 3P, AIRPAX
13	102646	6	FT	SLVG, SI RBR/FGLS, BLACK, 1/2
12	N07061	2	FT	SLVG, SI RBR/FGLS, BLACK, #2
11	042X131	5	FT	WIRE, TFE, 16AWG, 260C BLK
10	802822	5	FT	WIRE, GREEN/YELLOW, 12G, 105C
9	807888	8	FT	WIRE, THHN, 14GA, LT BLUE
8	N05860	17	FT	WIRE, THHN, 14GA, BLACK
7	116268	1	EA	SSR, 480V, 50A, SINGLE, DC-IN
6	103379	3	EA	TERM BLK, 50A
5	812419	5	EA	FUSE LPCC 10A
4	048I126	5	EA	FUSE BLOCK, 600V 10A, DIN-RAIL
3	104161	4	EA	TERM, 105A, 600V, 4AWG
2	103663	1	EA	TERM BLK, #6, GND, DIN MOUNT
1	115047	3	EA	XFMR,1.8KVA,480/400 – 240

UNLESS OTHERWISE SPECIFIED DIMENSIONS ARE IN INCHES. TOLERANCES ARE: DECIMALS .XX = ±.010 .XXX = ±.005 ANGLES ±.5	FOR MACHINING STANDARDS AND SYMBOLS, SEE ITW/DYNATEC SPEC. A05800	ITW Dynatec HENDERSONVILLE, TN	U/M EA
USED ON	APPROVALS: DRAWN CRF, DATE 6.12.09	WIRING DIAGRAM 6 HOSE/HEADS 400VAC N26&C22	STATUS R
NEXT ASSY.	CHECKED		SOURCE
	COMPUTER DESCRIPTION(25 CHARACTERS) SCHEM,480V,6H,XFMR,NC26	SIZE D DWG. NO. 115390 REV. E	GROUP
DO NOT SCALE DRAWING		SCALE N.T.S. CAD DRAWING SHEET 1 of 1	