Adhesive Application Solutions | ISO 9001 certified

Dyna BF ModPlus Marathon Slot and Bead Applicator

Technical Documentation, No.40-31, Rev.7.24

English - Original instructions

ITW Dynatec
An Illinois Tool Works Company
www.itwdynatec.com

Information about this manual

Read all instructions before operating this equipment!

It is the customer's responsibility to have all operators and service personnel read and understand this information. Contact your ITW Dynatec customer service representative for additional copies.

NOTICE:
Please be sure to include the serial number of your application system each time you order replacement parts and/or supplies. This will enable us to send you the correct items that you need.

NOTICE:
Most common screws, nuts and washers called out in the manual are not for sale and they can be obtained locally at your hardware Store. Specialty fasteners are available by contacting ITW Dynatec's Customer Service.

ITW Dynatec Service Parts and Technical Service:

AMERICAS	EUROPE, MIDDLE EAST & AFRICA	ASIA PACIFIC	
ITW Dynatec 31 Volunteer Drive Hendersonville, TN 37075 USA Tel. +1.615.824.3634 info@itwdynatec.com service@itwdynatec.com	ITW Dynatec Industriestrasse 28 40822 Mettmann Germany Tel. +49.2104.915.0 info@itwdynatec.de service@itwdynatec.de	ITW Dynatec No. 2 Anzhi Street, SIP, Suzhou, 215122 China Tel. +86.512.6289.0620 info@itwdynatec.cn service@itwdynatec.cn	ITW Dynatec Tsukimura Building 5th Floor 26-11, Nishikamata 7-chome Ota-ku, Tokyo 144-0051, Japan Tel. +81.3.5703.5501 info@itwdynatec.co.jp service@itwdynatec.co.jp

Index

Information about this manual 2

Index 3

Chapter 1 Declaration of Incorporation 5

Chapter 2 Safety Instructions 7

2.1 General Considerations 7
2.2 Warning Labels 7
2.3 Safety Symbols in this Manual 8
2.4 Safe Installation and Operation 9
2.5 Explosion/ Fire Hazard 10
2.6 Use of PUR (Polyurethane) Adhesives 10
2.7 Eye Protection & Protective Clothing 10
2.8 Electrical 11
2.9 Lockout/ Tagout 11
2.10 High Temperatures 11
2.11 High Pressure 12
2.12 Protective Covers 12
2.13 Servicing, maintenance 13
2.14 Cleaning Recommendation 13
2.15 Secure transport 13
2.16 Treatment for Burns from Hot Melt Adhesives 14
2.17 Measures in case of fire 14
2.18 Keep attention to environmental protection standards 15

Chapter 3 Description and Technical Specs 17

3.1 Applicable Safety Regulations 17
3.1.1 Intended Use 17
3.1.2 Unintended Use, Examples 17
3.1.3 Residual Risks 17
3.1.4 Technical changes 18
3.1.5 Using foreign components 18
3.1.6 Setting-up operation 18
3.2 Description Dyna BF ModPlus Marathon Applicator 19
3.2.1 Description 19
3.2.2 Technical Data 20
3.2.3 Dimensions 21
3.2.4 Model Designation Guide, Dyna BF ModPlus Marathon Applicator 22

Chapter 4 Installation and Start-Up 23

4.1 Conditions and requirements for installation and start-up 23
4.1.1 Quality of compressed Air 24
4.2 Advices for start-up 25
4.3 Installation and Start-Up Instructions 26
4.4 Shutdown 29

Chapter 5 Maintenance and Repair Notes 31

5.1 Security advices for maintenance and repair 31
5.1.1 Re-Assembly Procedures and General Cautions 32
5.1.2 Cleaning Recommendation 32
5.2 Maintenance plan 33
5.3 Adhesive Pressure Relief and Purging the Filter Chamber 34
5.4 Replacement of the Filter Element 35
5.5 Cleaning the Applicator 36
5.6 Demounting and Cleaning the Nozzle 38
5.7 Replacement of the Application Module 40
5.7.1 PN 118700 Module with 1-inch (25.4mm) slot die replacement for older versions 41
5.8 Stroke Limit Adjustment of the PN 110639 Adjustable Marathon Module 43
5.9 Testing and Replacement of the Heater Cartridges and Temperature Sensor 44

5.9.1 Testing of the Heater Cartridges and Temperature Sensor 44
5.9.2 Resistance Tables, Temperature sensors 46
5.9.3 Replacement of the Heater Cartridge or Temperature Sensor 47

Chapter 6 Troubleshooting 49

Chapter 7 Drawings & Bills of Materials 51

7.1 Typical Dyna BF Mod-Plus Marathon Applicator 52
7.2 ModPlus Swirl Module Assembly PN 118148 54
7.3 Extended Module Assembly PN 118150 55
7.4 BF Head Assembly with 3 Port Shoe Nozzle, PN 802843, and BF Head Assembly with 6 Port Shoe Nozzle, PN 802844 56
7.5 Slot Die Module Assembly, PN 118700 58
7.6 Nozzle Assembly 1.0 Inch Ribbon Coater, PN 118699 59
7.7 Blank ModPlus Module assembly, PN L18500 60
7.8 ModPlus Module for Shoe-Nozzle, PN 118149 60

Chapter 8 Ordering Guide, Options & Recommended Spare Parts 61

8.1 Mod-Plus Single Orifice Nozzles 61
8.2 Mod-Plus Multi-Orifice Nozzles 61
8.3 Nozzles, Spray (Swirl) or Extended 62
8.4 Optima single-orifice Modules 63
8.5 Spray (Swirl) Caps 63
8.6 Filter Kits 63
8.7 Shoe Head Nozzles 63
8.8 Swirl Air Kits 64
8.9 Heater Cartridges 64
8.10 RTD Temperature Sensor 64
8.11 Nozzle Cleaning Kits 64
8.12 High Temp Heater Splice Kit PN 102645 65
8.13 Replacement Module for the Standard Mod-Plus Module PN 110639 65
8.14 Flexible Air Line Kit for Solenoid Valve PN 111336 65
8.15 Recommended Spare Part Lists 66
8.15.1 Typical Dyna BF Mod-Plus Marathon Applicator 66
8.15.2 ModPlus Swirl Module Assembly PN 118148 66
8.15.3 Extended Module Assembly PN 118150 66
8.15.4 BF Head Assembly with 3 Port Shoe Nozzle, PN 802843 and BF Head Assembly with 6 Port Shoe Nozzle, PN 802844 67
8.15.5 Slot Die Module Assembly, PN 118700 67
8.15.6 Nozzle Assembly 1.0 Inch RibbonCoater, PN 118699 67
8.15.7 Blank ModPlus Module assembly, PN L18500 68
8.15.8 Lubricants and Fluids 68

Chapter 9 Appendix 69

9.1 Air Filter and Regulator Kit for Applicators, PN 100055 69
9.2 Installation Notes for Air Filter and Regulator Kit 69
9.3 Pneumatic Drawing for Head Air Control 69
9.4 Air Filter and Regulator Kit, PN 100055 70
Revisions 71

Chapter 1
Declaration of Incorporation

Declaration of incorporation

according to the EU Machinery Directive 2006/42/EG, Annex II, 1.B
for partly completed machinery

Manufacturer:
ITW Dynatec,
31 Volunteer Drive
37075 Hendersonville, TN

Person residing within the Community authorised to compile the relevant technical documentation:
Andreas Pahl
ITW Dynatec GmbH,
Industriestraße 28
40822 Mettmann

Description and identification of the partly completed machinery:

Product / Article:	Dyna BF Applicator Head
Serial no:	_____
Machine number:	_____
Project number:	BF Head
Project name:	BF Applicator Head
Function:	Delivery of hot melt adhesive to substrates

It is declared that the following essential requirements of the Machinery Directive 2006/42/EG have been fulfilled:

1.3.2.; 1.3.7.; 1.5.1.; 1.5.16.; 1.5.2.; 1.5.5.; 1.5.6.; 1.5.7.; 1.6.3.

It is also declared that the relevant technical documentation has been compiled in accordance with part B of Annex VII.

It is expressly declared that the partly completed machinery fulfils all relevant provisions of the following EU Directives:

2004/108/EC:	(Electromagnetic compatibility) Directive 2004/108/EC of the European Parliament and of the Council of 15 December 2004 on the approximation of the laws of the Member States relating to electromagnetic compatibility and repealing Directive 89/336/EEC
2006/95/EC:	(Voltage limits) Directive of the european Parliament and of the council of 12 December 2006 on the harmonisation of the laws of Member States relating to electrical equipment designed for use within certain voltage limits (codified version)

Reference to the harmonized standards used:

EN ISO 14121-1:2007	Safety of machinery - Risk assessment - Part 1: Principles (ISO 14121-1:2007)
EN 60204-1:2006-06	Safety of machinery - Electrical equipment of machines - Part 1: General requirements
EN 349:1993+A1	Safety of machinery - Minimum gaps to avoid crushing of parts of the human body
EN ISO 13850:2008	Safety of machinery - Emergency stop - Principles for design (ISO 13850:2006)

Reference of the other technical standards and specifications used:

EN ISO 12100-1/A1:2009	Safety of machinery - Basic concepts, general principles for design - Part 1: Basic terminology, methodology
EN ISO 12100-2:2003/A1	Safety of machinery - Basic concepts, general principles for design - Part 2: Technical principles

The manufacturer or his authorised representative undertake to transmit, in response to a reasoned request by the national authorities, relevant information on the partly completed machinery. This transmission takes place:

This does not affect the intellectual property rights!

Important note! The partly completed machinery may be put into service only if it was determined, where appropriate, that the machinery into which the partly completed machinery is to be installed meets the provisions of this Directive.

Hendersonville, TN, 2012.10.10
Place, date

Judson Broome
Signature
Judson Broome
General Manager

Chapter 2
Safety Instructions

2.1 General Considerations

- **All operators and service personnel must read and understand this manual before operating or servicing equipment.**
- **All maintenance and service on this equipment must be performed by trained technicians.**

Read and adhere to the manual!

1. Keep the binding rules for accident prevention valid for your country and the place of installation. Also keep the approved qualified technical rules for safety-conscious and professional work.
2. Additional safety instructions and/ or symbols are located throughout this manual. They serve to warn maintenance personnel and operators about potentially hazardous situations.
3. Inspect the machine for unsafe conditions daily and replace all worn or defective parts.
4. Keep work area uncluttered and well lit. Remove all material or things not needed for the production from the workspace of the equipment!
5. All covers and guards must be in place before operating this equipment.
6. Subject to technical modifications without notice!
7. To ensure proper operation of the equipment, use specified electrical and/ or air supply sources.
8. Do not attempt to alter the design of the equipment unless written approval is received from ITW Dynatec.
9. Keep all manuals readily accessible at all times and refer to it often for the best performance from your equipment.

2.2 Warning Labels

1. Read and obey all of the warning labels, signs and caution statements on the equipment.
2. Do not remove or deface any of the warning labels, signs and caution statements on the equipment.
3. Replace any warning labels, signs and caution statements which have been removed or defaced. Replacements are available from ITW Dynatec.

2.3 Safety Symbols in this Manual

Mandatory signs

	General mandatory sign
	Read and adhere to the documentation!
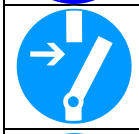	Switch the unit voltage-free before working! Main switch OFF!
	Wear headgear, protective goggles and ear protection!

	Wear foot guard!
	Wear protective gloves!
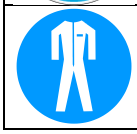	Wear protective clothing!

Warning signs

NOTE: The dangers and risks exist if the corresponding instructions are not heeded and the precautionary measures are not taken!

	Caution, danger spot! This sign points to possible dangers for life and physical condition or to possible risks for machine and material or to possible risks for environment. The word **“DANGER”** in addition with this points to possible dangers of life The words **“WARNING” and “CAUTION”** in addition with this sign point to possible risks of injury. The word **“ADVICE”** in addition with this sign points to possible risks for machine, material or environment.

	Danger, high voltage! This sign points to possible dangers for life and physical condition caused by electricity. **Risk of injury, mortal danger!**
	Caution, hot surface! This sign points to possible risks of burns. **Risk of Burns!**
	Caution, high pressure! This sign points to possible risks of injury caused by high pressure. **Risk of injury!**
	Caution, rotating rolls! This sign points to possible risks of injury caused by inrunning nip (at rolls). **Risk of injury!**

Prohibition signs

	Fire danger! **Smoking prohibited!**

	Fire danger! **Fire and open flames prohibited!**

2.4 Safe Installation and Operation

Read and adhere to the manual!

1. Read this manual before applying electrical power to the equipment. Equipment may be damaged by incorrect electrical connections.

2. To avoid possible failure of hoses, make sure all hoses are routed to avoid kinking, tight radius turns (8” or less) and abrasive contact. Hot-melt hoses should not have prolonged contact with heat-absorbing surfaces such as cold floors or metal troughs. These heat-absorbing surfaces can alter adhesive flow and cause incorrect calibration. Hoses should never be covered with materials that prevent heat dissipation, such as insulation or sheathing. Hoses must be spaced apart from each other, not making direct contact.

3. Do not use adhesive that is dirty or that may be chemically contaminated. Doing so can cause system clogging and pump damage.

4. When adhesive hand-held applicators or other movable applicators are used, never point them at yourself or at any other person. Never leave a hand-held applicator's trigger unlocked when not actually in use.

5. Do not operate the hopper or other system components without adhesive for more than 15 minutes if the temperature is 150 degrees C (300 degrees F) or more. To do so will cause charring of the residual adhesive.

6. Never activate the heads, hand-held applicators and/ or other application devices until the adhesive's temperature is within the operating range. Severe damage could result to internal parts and seals.

7. Never attempt to lift or move the unit when there is molten adhesive in the system.

8. In case of an emergency or exceptional incident, press the emergency stop button in order to stop the unit quickly.

9. Use the unit only as it is intended to.

10. Never let the unit run unattended.

11. Operate the unit only in a faultless and fully functional condition. Check and make sure that all safety devices work in proper form!

	Smoking, fire and open flames prohibited! Fire danger! Make absolutely sure that there is no smoking and no fire being lit in the work area!

2.5 Explosion/ Fire Hazard

1. Never operate this unit in an explosive environment.

2. Use cleaning compounds recommended by ITW Dynatec or your adhesive supplier only.

3. Flash points of cleaning compounds vary according to their composition, so consult with your supplier to determine the maximum heating temperatures and safety precautions.

2.6 Use of PUR (Polyurethane) Adhesives

1. PUR adhesives emit fumes (MDI and TDI) that can be dangerous to anyone exposed to them. These fumes cannot be detected by the sense of smell. ITW Dynatec strongly recommends that a power-vented exhaust hood or system be installed over any PUR system.

2. Consult with your adhesive manufacturer for specifics about required ventilation.

CAUTION

Because of the nature of PUR adhesives to strongly bond in the presence of moisture, care must be taken to prevent them from curing inside ITW Dynatec equipment.

If PUR adhesive solidifies in a unit, the unit must be replaced. Always purge old PUR adhesive from the system per your adhesive manufacturer's instructions and time table.

ALLOWING PUR ADHESIVE TO CURE IN A UNIT OR ITS COMPONENTS VOIDS ITW DYNATEC'S WARRANTY.

2.7 Eye Protection & Protective Clothing

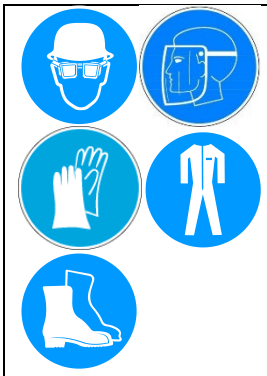

WARNING
EYE PROTECTION & PROTECTIVE CLOTHING REQUIRED

1. It is very important that you PROTECT YOUR EYES when working around hot melt adhesive equipment!

2. Wear a face shield conforming to ANSI Z87.1 or safety glasses with side shields which conform to ANSI Z87.1 or EN166.

3. Failure to wear a face shield or safety glasses could result in severe eye injury.

4. It is important to protect yourself from potential burns when working around hot melt adhesive equipment.

5. Wear heat-resistant protective gloves and long-sleeved, protective clothing to prevent burns that could result from contact with hot material or hot components.

6. Always wear steel-reinforced safety shoes.

2.8 Electrical

DANGER HIGH VOLTAGE

1. Dangerous voltages exist at several points in this equipment. To avoid personal injury, do not touch exposed connections and components while input power is on.
2. Disconnect, lockout and tag external electrical power before removing protective panels.
3. A secure connection to a reliable earth ground is essential for safe operation.
4. An electrical disconnect switch with lockout capability must be provided in the line ahead of the unit. Wiring used to supply electrical power must be installed by a qualified electrician.
5. Notify the maintenance personnel immediately, if cables are damaged. Provide for exchanging the defective components immediately.

2.9 Lockout/ Tagout

Switch the unit voltage-free before working!
Main switch OFF!

1. Follow OSHA 1910.147 (Lockout/ Tagout Regulation) for equipment's lockout procedures and other important lockout/tagout guidelines.
2. Be familiar with all lockout sources on the equipment.
3. Even after the equipment has been locked out, there may be stored energy in the application system, particularly in the capacitors within the panel box. To ensure that all stored energy is relieved, wait at least one minute after removing power before servicing electrical capacitors.

2.10 High Temperatures

WARNING HOT SURFACE

1. Severe burns can occur if unprotected skin comes in contact with molten adhesive or hot application system parts.
2. Face shields (preferred) or safety glasses (for minimum protection), heat-resistant protective gloves and long-sleeved clothing must be worn whenever working with or around adhesive application systems.

2.11 High Pressure

WARNING HIGH PRESSURE PRESENT

1. To avoid personal injury, do not operate the equipment without all covers, panels and safety guards properly installed.
2. To prevent serious injury from molten adhesive under pressure when servicing the equipment, disengage the pumps and relieve the adhesive system's hydraulic pressure (i.e. trigger the heads, hand-held applicators, and/or other application devices into a waste container) before opening any hydraulic fittings or connections.
3. IMPORTANT NOTE: Even when a system's pressure gauge reads “0” psi, residual pressure and trapped air can remain within it causing hot adhesive and pressure to escape without warning when a filter cap or a hose or hydraulic connection is loosened or removed. For this reason, always wear eye protection and protective clothing.
4. Either of the two High Pressure symbols shown may be used on ITW Dynatec equipment.
5. Keep the given operating pressure.
6. Notify the maintenance personnel immediately, if hoses or components are damaged. Provide for exchanging the defective components immediately.

2.12 Protective Covers

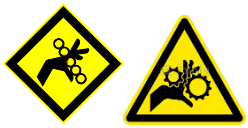

WARNING
DO NOT OPERATE WITHOUT GUARDS IN PLACE

1. Keep all guards in place!
2. To avoid personal injury, do not operate the application system without all covers, panels and safety guards properly installed.
3. Never get your extremities and/or objects into the danger area of the unit. Keep your hands away from running parts of the unit (pumps, motors, rolls or others).

2.13 Servicing, maintenance

1. Only trained and qualified personnel are to operate and service this equipment.
2. Before any service work disconnect the external power supply and the pressure air supply!
3. Never service or clean equipment while it is in motion. Shut off the equipment and lock out all input power at the source before attempting any maintenance.
4. Follow the maintenance and service instructions in the manual.
5. Keep the maintenance rates given in this documentation!
6. Any defects in the equipment that impact safe operation have to be repaired immediately.
7. Check screws that have been loosened during the repair or maintenance, if they are tight again.
8. Replace the air hoses in preventive maintenance regularly, even if they have got no viewable damages! Adhere to the manufacturers` instructions!
9. Never clean control cabinets or other houses of electrical equipment with a jet of water!
10. Adhere to the current safety data sheet of the manufacturer when using hazardous materials (cleaning agents, etc.)!

2.14 Cleaning Recommendation

- Filters are disposable and need to be replaced regularly. DO NOT boil in mineral oil, solvents or water; the sealant used in filter assembly may become brittle and very likely disintegrate when boiled.
- When cleaning other components in mineral oil, remove all non-metallic items (O-rings, seals, filter cartridge, etc.) away from chemicals before components are subjected to hot mineral oil cleaning.
- If there is not a specific rebuild kit available or directions on how to clean a part, please treat it as a replacement item and do not attempt to clean/rebuild.

2.15 Secure transport

1. Examine the entire unit immediately after receipt, if it has been delivered in perfect condition.
2. Let damages in transit certify by the carrier and announce them immediately to ITW Dynatec.
3. Use only lifting devices that are suitable for the weight and the dimensions of the equipment (see drawing of the equipment).
4. The unit has to be transported upright and horizontally!
5. The unit has to cool down to room temperature before packaged and transported.

2.16 Treatment for Burns from Hot Melt Adhesives

Measures after being burned:

1. Burns caused by hot melt adhesive must be treated at a burn center. Provide the burn center's staff a copy of the adhesive's M.S.D.S. to expedite treatment.

2. Cool burnt parts immediately!

3. Do not remove adhesive forcibly from the skin!

4. Care must be used when working with hot melt adhesives in the molten state. Because they rapidly solidify, they present a unique hazard. Even when first solidified, they are still hot and can cause severe burns.

5. When working near a hot melt application system, always wear safety shoes, heat-resistant protective gloves, safety goggles and protective clothes that cover all vulnerable parts of the body.

6. Always have first-aid information and supplies available.

7. Call a physician and/or an emergency medical technician immediately. Let the burns medicate by a medic immediately.

2.17 Measures in case of fire

1. Please heed that not covered hot parts of the engine and molten hot melt may cause heavy burns. Risk of burns!

2. Work very carefully with molten hot melt. Keep in mind, that already jelled hot melt can be very hot, too.

3. When working near a hot melt application system, always wear safety shoes, heat-resistant protective gloves, safety goggles and protective clothes that cover all vulnerable parts of the body!

Measures in case of fire:

Wear safety shoes, heat-resistant protective gloves, safety goggles and protective clothes that cover all vulnerable parts of the body.

Firefighting - burning hot melt:

Please keep attention to the safety data sheet given by the adhesive manufacturer.

EXTINGUISH FIRE

Appropriate extinguishing agents:
Foam extinguisher, Dry powder, Spray, Carbon dioxide (CO_2), Dry sand.

For safety reasons not appropriate extinguishing agents: None.

Firefighting - burning electrical equipment:

Appropriate extinguishing agents:
Carbon dioxide (CO_2), Dry powder.

2.18 Keep attention to environmental protection standards

1. When working on or with the unit, the legal obligations for waste avoidance and the duly recycling / disposals have to be fulfilled.

2. Keep attention, that during installations, repairs or maintenance matters hazardous to water, like adhesive / adhesive scrap, lubricating grease or oil, hydraulic oil, coolant and cleaner containing solvent do not pollute the ground or get into the canalization!

3. These matters have to be caught, kept, transported and disposed in appropriate reservoirs!

4. Dispose these matters according to the international, national and regional regulations.

Chapter 3
Description and Technical Specs

3.1 Applicable Safety Regulations

3.1.1 Intended Use

The Dyna BF ModPlus Marathon Slot and Bead Applicator may be used only to apply suitable materials, e.g. adhesives. When in doubt, seek permission from ITW Dynatec.

The adhesive will be melted in an ITW Dynatec's Adhesive Supply Unit and supplied to the Applicator, which applies the adhesive to the substrate.

If the unit is not used in accordance with this regulation, a safe operation cannot be guaranteed.

The operator - and not ITW Dynatec - is liable for all personal injury or property damages resulting from unintended use!

Intended use includes, that you
- read this documentation,
- heed all given warnings and safety instructions, and
- do all maintenance within the given maintenance rates.

Any other use is considered to be unintended.

3.1.2 Unintended Use, Examples

The Applicator may not be used under the following conditions:
- In defective condition.
- In a potentially explosive atmosphere.
- With unsuitable operating/processing materials.
- When the values stated under Specifications are not complied with.

The Applicator may not be used to process the following materials:
- Toxic, explosive and easily flammable materials.
- Erosive and corrosive materials.
- Food products.

3.1.3 Residual Risks

In the design of the Applicator, every measure was taken to protect personnel from potential danger. However, some residual risks cannot be avoided.

Personnel must be aware of the following:

- Risk of burns from hot material.
- Risk of burns from hot Adhesive Supply Unit and Applicator components.
- Risk of burns when conducting maintenance and repair work for which the system must be heated up.
- Risk of burns when attaching and removing heated hoses.
- Material fumes can be hazardous. Avoid inhalation. If necessary, exhaust material vapors and/or provide sufficient ventilation of the location of the system.
- Risk of pinching parts of the body at running parts of the unit (pumps, motors, rolls or others).
- The safety valves may malfunction due to hardened or charred material.

3.1.4 Technical changes

Any kind of technical changes having impact to the security or the operational liability of the system should only be done by written agreement of ITW Dynatec. Suchlike changes made without given a corresponding written agreement will lead to immediate exclusion of liability granted by ITW Dynatec for all direct and indirect subsequent damages.

3.1.5 Using foreign components

ITW Dynatec takes no responsibility for consequential damages caused by using foreign components or controllers that have not been provided or installed by ITW Dynatec.

ITW Dynatec does not guarantee that foreign components or controllers used by the operating company are compatible to the ITW Dynatec-system.

3.1.6 Setting-up operation

We recommend asking for an ITW Dynatec-service technician for the setting-up operation, to ensure a functioning system. Let yourself and the people working with or working on the system be introduced to the system on this occasion.
ITW Dynatec takes no responsibility for damages or faults caused by any untrained personal.

3.2 Description Dyna BF ModPlus Marathon Applicator

3.2.1 Description

ITW Dynatec's Dyna BF ModPlus Marathon Slot and Bead Applicator is an air-operated, single or multi-nozzle hot melt adhesive applicator assembly with an integrated filter cartridge which prevents particulate matter from obstructing flow through the head. It is used with intermittent pressure and constant pressure hot melt adhesive supply units (ASUs).

Each applicator features one or more adhesive valve modules mounted to a single service block. Each module is opened and closed by air pressure. Springs are used to keep needles closed when no air pressure is supplied to the head. The rate of adhesive flow from the applicator is determined by the adhesive pressure applied by the ASU's pump and the size of the nozzle orifice.

The applicator is heated by replaceable cartridge heating elements which are controlled by an integrated RTD temperature sensor and electronic control.

As seen in the illustration below, the ModPlus Dyna BF module(s) is mounted onto a service block. A piston inside the module is pneumatically triggered by a solenoid, which allows adhesive to flow through a valve within the module. The module has an adjustable stroke for applications which require that the operator make manual adjustments to the stem stroke, i.e. the vertical travel of the needle, in order to adjust the quantity of adhesive coming from the module.

The heated adhesive supply hose may be connected at the rear of the service block or at the top. Adhesive flows from the hose into and through the channels within the block to the module. Air pressure opens the adhesive valve, allowing adhesive to flow through the module's nozzle when the valve is open.

Operating air, from the solenoid valve, and electrical connections are made at the top of the service block.

Eight standard Dyna BF ModPlus models supporting up to eight modules, are available, ranging in width from 44mm to 198mm (1.73" to 7.8"). Each model can be configured for either ITW Dynatec's DynaControl or Dynamini controller, or it can be con-figured for a competitive upgrade. Washdown models are available for all of these configurations.

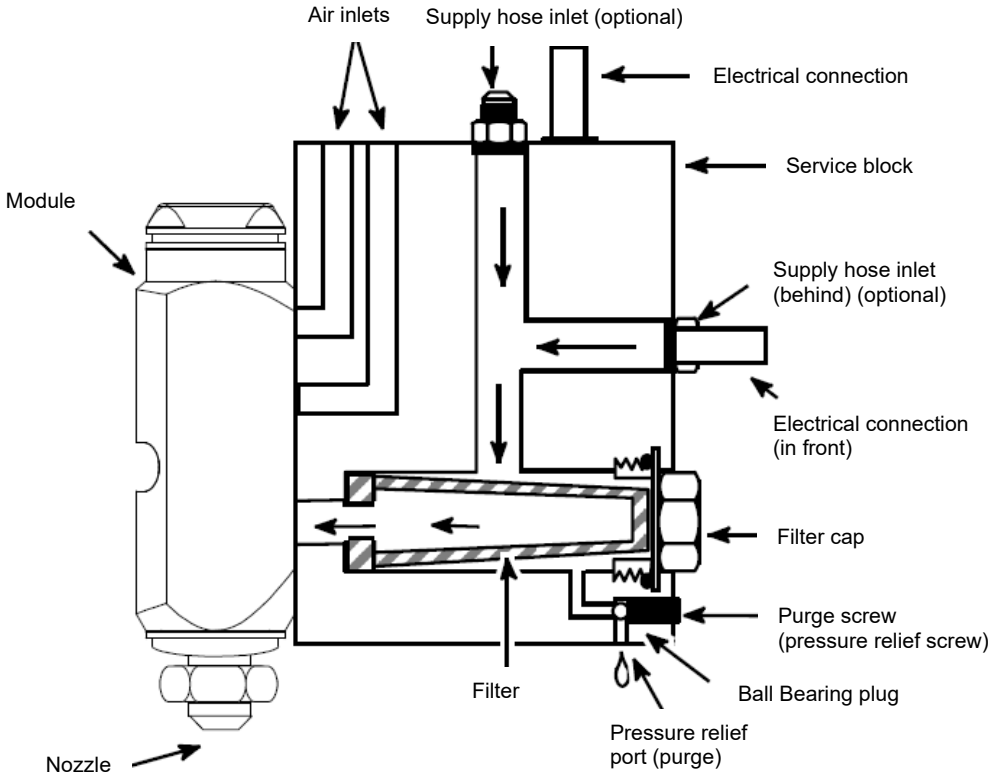

The Dyna BF Flow Pattern

3.2.2 Technical Data

Environmental:

Storage/ shipping temperature..... -40°C to 70°C (-40°F to 158°F)
Ambient service temperature ..... 0°C to 50°C (32°F to 122°F)
Noise emission.....The acoustic pressure level measured according to EN 13023 does not exceed the value of 80 dB (A).

Physical:

Dimensions .....see dimensional layouts on following page
Weight ..... Model Dyna BF0441: 0.68 to 2.05 kg (1.5 to 4.5 lb.)
Mounting .....M5x8 screws with insulators or 1/2" rod mount, insulated clamps, 12 to 13 mm rod

Performance:

Operating temperature range..... 38°C to 218°C (100°F to 425°F)
Warm-up time..... 15 minutes for cold start/ 1 minute for module change only
Cycle rate .....5000 cycles/ minute maximum
Adhesive viscosity..... 100 to 20000 mPa. sec. (100 to 20000 centipoise)
Adhesive pressure range .....68 bar maximum (1000 psi maximum)

Air requirements:

Air pressure range .....4.8 to 9.5 bar (70 to 140 psi)
Air consumption ..... .28 liters/ minute @ 100 cycles/ minute (.01 SCFM per module @ 100 cycles/ minute)

Electrical:

Supply voltage ..... 120 VAC or 200-240 VAC/ 1p/ 50-60 Hz

Power requirements:

Model	Number of Modules	Spacing Between Nozzle Centers in mm	Wattage	
			120 VAC	240 VAC
BF 0441	1	-	200	200
BF 0442	2	22	200	200
BF 0662	2	44	240	400
BF 0883	3	22/ 22	240	400
BF 0884	4	22/ 22/ 22	320	475
BF 1104	4	22/ 44/ 22	360	585
BF 1546	6	2 x 22/ 44/ 2 x 22	500	775
BF 1988	8	3 x 22/ 44/ 3 x 22	600	960

3.2.3 Dimensions

	WIDTH	
Model no.	**A**	**B**
BF 0441	44mm 1.73”	n.a.
BF 0442	44mm 1.73”	22mm .86”
BF 0662	66mm 2.6”	44mm 1.73”
BF 0883	88mm 3.46”	45mm 1.76”
BF 0884	88mm 3.46”	66mm 2.6”
BF 1104	110mm 4.33”	88mm 3.46”
BF 1546	154mm 6.06”	132mm 5.2”
BF 1988	198mm 7.8”	176mm 6.93”

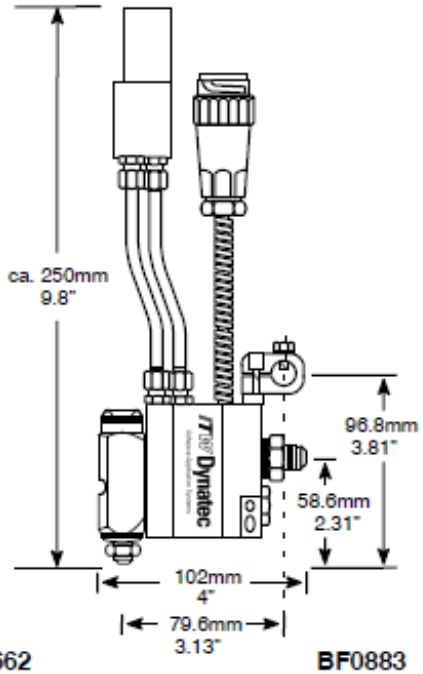

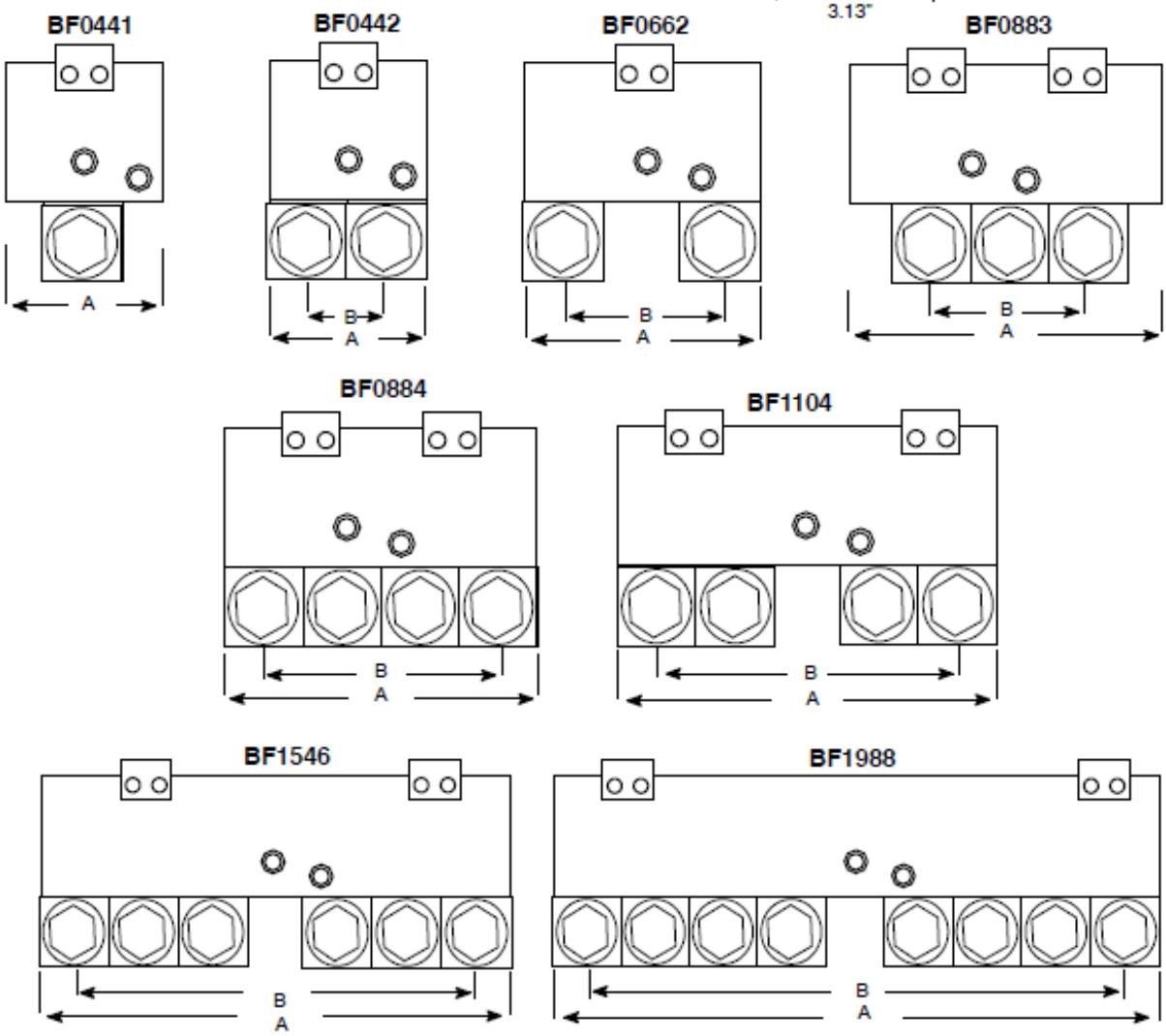

3.2.4 Model Designation Guide, Dyna BF ModPlus Marathon Applicator

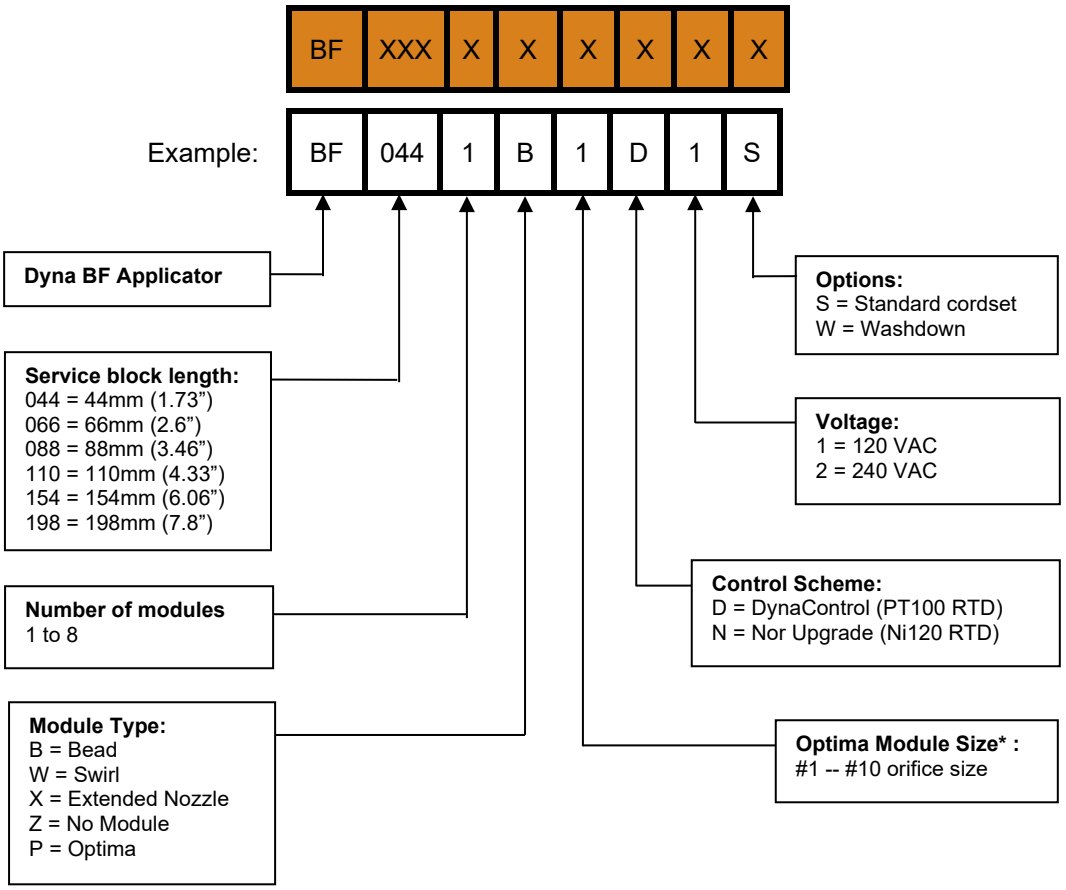

** This character (Optima Module Size) only appears when an Optima module is used.*

Chapter 4
Installation and Start-Up

CAUTION

- Before installation, please read this documentation carefully.
- Pay attention to all the installation and connecting advices.
- Heed all safety instructions mentioned in Chapter 2.
- All installation and start-up procedures must be performed by qualified, trained technicians.

4.1 Conditions and requirements for installation and start-up

Place requirement

Install the Applicator in the machine so that the operator is able to work on it from all sides, for e.g. for adjusting, preparing, maintaining, repairing, cleaning, etc.
See dimensions in Chapter 3.

Electrical connection

- Provide necessary electrical connection. See electrical schematics.
- The unit has to be connected according to the schematics. Heed the regulations of the VDE or local power supply organization in all cases!
- Never connect or disconnect plug-and-socket connections under load!
- Incoming electrical power and temperature control is supplied through the flexible cable exiting the adhesive supply hose cuff. The applicator has a circular, plastic connector which mates with the connector attached to this cable.

Pneumatic connection

Provide necessary pneumatic connection:

- The required air pressure is 6 bar.
- **CAUTION: In any case the air has to be clean and dry!** See advices under “Quality of compressed air” on next page.
- Incoming (operating) air is supplied through a solenoid valve. It is controlled by a four-way solenoid valve and must be separately regulated and maintained at a pressure between 5.4 to 8.5 bar (80 to 125 psi). Air lines from the solenoid valve must be 6.4mm (1/4 inch). Head air inlet ports are G1/8 threads (1/8 NPT). The air outlet ports on the solenoid are marked A (open/ ON) and B (closed/ OFF).
- Connect a compressed-air supply hose of DN8 at least to the Applicator.
- Please heed that units with high air demand may not be used at the same time with the same air supply.

Mounting advices

ADVICES

- Check all screw connections at the unit and retighten if necessary.
- Lay the cables and heated hoses so that no risk or least possible risk of stumbling occurs.

4.1.1 Quality of compressed Air

CAUTION

- **In any case, the air has to be clean and dry!**
- **The min. requirement for compressed air supply to solenoids to control automatic Applicators is ISO 8573-1:2010 class 2:4:3.**
- **We recommend installing the ITW Dynatec's Air Filter and Regulator Kit PN 100055 (see Appendix).**

Compressed air quality classes according to ISO 8573-1:2010 class 2:4:3:

ISO 8573-1: 2010	Solid particles				Water		Oil
Class	Maximum number of particles per m³			Mass concentration	Vapor pressure dew point	Liquid	Total oil content (liquid, aerosol and mist)
	0.1-0.5 µm	0.5-1 µm	1-5 µm	mg/m³	°C	g/m³	mg/m³
0	As stipulated by the equipment user, stricter requirements than class 1.						
1	≤ 20,000	≤ 400	≤ 10	-	≤ -70	-	0.01
2	**≤ 400,000**	**≤ 6,000**	**≤ 100**	**-**	≤ -40	-	0.1
3	-	≤ 90,000	≤ 1,000	-	≤ -20	-	**1**
4	-	-	≤ 10,000	-	**≤ +3**	-	5
5	-	-	≤ 100,000	-	≤ +7	-	-
6	-	-	-	≤ 5	≤ +10	-	-
7	-	-	-	5-10	-	≤ 0.5	-
8	-	-	-	-	-	0.5 - 5	-
9	-	-	-	-	-	5 - 10	-
X	-	-	-	> 10	-	> 10	> 10

4.2 Advices for start-up

ADVICE

Start with start-up operation only if
- the functioning of the unit is known, and
- the unit installation for start-up has been done according to the details given in the previous chapter. That means all unit components are operable.

Read the documentation thoroughly to avoid breakdowns caused by faulty handling.

We recommend asking for an ITW Dynatec-service technician for the start-up operation, to ensure a functioning unit. Let yourself and the people working with or working on the unit be introduced to the unit on this occasion.

ITW Dynatec takes no responsibility for damages or faults caused by any untrained personnel.

Heed all safety instructions mentioned in chapter 2.

Allow only skilled expert staff to do the start-up operation!

Always wear safety shoes, heat-resistant protective gloves, safety goggles and protective clothing when working on or with the unit. Risk of burns and risk of injury!

Risk of electric shocks! Risk of injury, Mortal danger!

The unit components are getting very hot during operation! Risk of burns!

The adhesive is very hot and pressurized! Risk of burns and risk of injury! At working temperature, molten adhesive could cause heavy burns. Let spilled out adhesive cool down first, before removing it!

CAUTION

During operating the unit, heed the following:
- Heed all safety instructions mentioned in chapter 2.
- Set the working temperatures strictly within the temperature range given by the adhesive manufacturer. Do not exceed this temperature range.
- Switch the unit off during longer production breaks.
- Switch the unit to standby during shorter production breaks.
- Avoid voltage fluctuation.
- The air supply has to be clean and dry.
- In case of an emergency or exceptional incident, press the emergency stop button in order to stop the unit quickly.

The unit is ready for operation, when
- all temperatures are within the tolerances and
- all motors are switched on.

Risk of stumbling on cables and heated hoses!

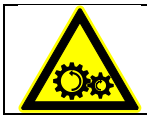

Keep your hands away from running parts of the unit (pumps, motors, rolls or others).

4.3 Installation and Start-Up Instructions

CAUTION

- All work on or with this unit is only permitted for skilled personnel!
- Pay attention to the electrical schematics!
- Clean and dry air and air pressure of 6 bar to the applicator solenoids is required.
- All heating elements have to be mounted and operated secured and according to the valid regulations.

WARNING

- While installing the Applicator, use an appropriate protection device to avoid unintended contact with heated parts and with spilling out hot adhesive. The protection device has to prevent also the operator against not reaching into the adhesive application and against injuring.
- Risk of burns and risk of injury!

NOTES:

- The applicator has been tested at the factory and is ready for installation and operation.

- Dyna BF ModPlus applicators require a separate 4-way solenoid valve for each applicator. The 4-way valves must be mounted so that the air lines to each applicator are as close to the same length as practical.

- The modular applicator has a very high speed capability, so to take advantage of this, the solenoids must be located as close to the applicators as possible to keep applicator air lines short.
  NOTE: air lines and fittings must be capable of withstanding temperatures up to 218°C (425°F.)

- ITW Dynatec supplies Air Filter and Regulator Kit (PN 100055) to be used with air-operated applicators (see the Air Filter and Regulator Kit in the appendix of this manual).

- Applicator control solenoid valves may be controlled by timers or limit switches which sense the position of the package or object to which adhesive is being applied. Switches must be mounted on moveable brackets to provide adjustment for proper location of adhesive application.

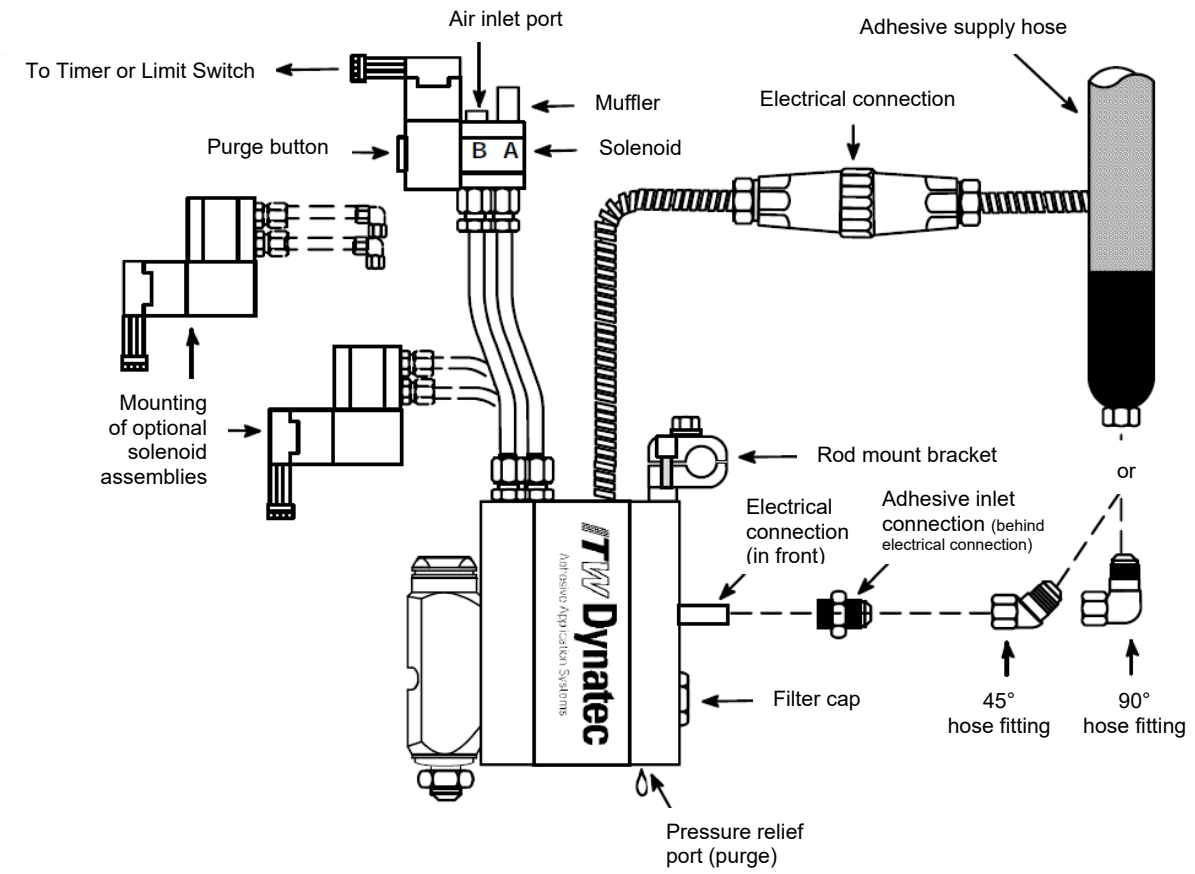

Installation Diagram

Installation:

NOTE: See the installation diagram above for location of the components referred to in the following section.

1. The applicator must be supported from brackets that permit lateral and vertical adjustments. Mount the applicator on a 12mm to 13mm rod or bracketry using 5mm screws and insulators provided.
   Allow access to the filter.
   Be sure that the stroke limit adjustment screws are accessible and that the “weep” holes are visible for periodic inspection.
   For proper application, the maximum distance from the nozzle tip to the substrate should not exceed 6.4mm (1/4 inch).

2. Before making the adhesive connection to the applicator, align the adhesive supply hose with its electrical connector oriented in relation to either of the electrical connectors on the applicator.
   Connect the swivel fitting of the hot melt hose to the adapter on the service block, using either the inlet port located above the filter cap or the port located on the top of the applicator (behind the electrical connection in the diagram).
   When tightening the hose fitting, hold the hose cuff to prevent the hose core from rotating.

3. Make the electrical connection from the hose to the applicator by connecting the female connector of the hose to the male connector of the applicator at either of the two electrical connects on the applicator.

4. When connecting the air lines to the applicator, the air line which has air pressure to the module when the 4-way solenoid is OFF is the closing air line (marked “B” on the solenoid and applicator). This line connects to the “B” air fitting on the applicator. The other air line (marked “A”) is connected to the “A” air port. The “A” air line has pressure when the solenoid is ON (open). This line can be checked by loosening the air line after the system has been pressurized.

CAUTION

- **Do not use lubricating oil with the air supply as applicators are lubricated at the factory and do not require lubrication when used in production.**
- **Where oil is present in the air supply, an Air Filter and Regulator Kit (Dynatec PN 100055) must be installed between the standard air regulator/ filter and the applicator.**

Start-up:

NOTE: This is a generic start-up. The customers may have different ways to start-up their unit.

1. Check the complete unit and the traverse paths for safety. Fix visible damages immediately.
2. Before switching the unit on, make sure that the starting unit could hurt no one!
3. Remove all material or other things not needed for the production from the workspace of the unit!
4. Check and make sure that all safety devices are working in proper form!
5. Switch on the system electrically and pneumatically.

   When operating temperatures for adhesive, tank, material hoses and Applicators have been reached, purging can begin.

   Permit the applicator to warm up at least 15 minutes (1 minute for module change) before reading temperature.
   It is advisable to check the temperature of the applicator. This can be done through the temperature readout of the adhesive supply unit.
   Surface temperature may be checked with a separate pyrometer and surface probe or with a dial thermometer.

CAUTION! Risk of burns and injury!

- The unit operates with very high temperatures and high adhesive pressure.
- During the purging procedure, hot adhesive can come out of the applicator under high pressure.
- Hot adhesive/ oil comes out of the Applicator/ hoses!
- Always wear heat-resistant protective gloves, safety goggles and protective clothing! Molten adhesives at operating temperature could cause heavy burns.
- Do not touch the hot surfaces or parts without wearing heat-resistant protective gloves!

5. Remove the nozzle from the module by loosening the nozzle cap.
   Place a heat resistant container under the module to collect the material that drains from the applicator.
   Manually open the solenoid by pushing (with a small screwdriver or other tool) the purge button located on the solenoid coil.
   Continue to hold in the purge button until all air and oil have drained and only adhesive flows from the module.

6. Replace nozzle, orienting the nozzle tip so it points toward the substrate.
   The applicator is ready for operation.

4.4 Shutdown

CAUTION! Risk of burns and injury!

- The unit operates with very high temperatures and high adhesive pressure.
- Hot adhesive/ oil comes out of the Applicator/ hoses!
- Always wear heat-resistant protective gloves, safety goggles and protective clothing! Molten adhesives at operating temperature could cause heavy burns.
- Do not touch the hot surfaces or parts without wearing heat-resistant protective gloves!

Removing dirt:

ADVICE

Remove dirt from Adhesive Supply Unit and Applicator immediately.

Wooden scrapers, lint-free cloth with cleaner **may only be used** for cleaning.

Metallic scrapers or other tools made from steel, like knife or blades, **may not be used** under any circumstances.

CAUTION

PUR-adhesives react with air humidity. To avoid blocked nozzles or Applicators, these parts have to be protected airproof with PUR cleaner immediately after production stop or the whole unit must be purged with PUR cleaner.

Nozzles could be protected e.g. with protection caps filled with PUR-cleaner, mounted immediately after production stop.

Temporary Shutdown:

1. Switch the unit voltage-free and pressureless.
2. Release adhesive remains from hose and Applicator, which is to be disassembled.
3. Release remaining pressure from the unit.
4. Disconnect power supply lines.
5. Dismount hose from Adhesive Supply Unit and Applicator and clean it.
6. Pack components in a corrosion-proof manner.
7. Secure hose and Applicator and store in a safe place.

Continuous Shutdown and Waste Disposal

1. Switch the unit voltage-free and pressureless.
2. Release adhesive remains from hose and Applicator, which is to be disassembled.
3. Release remaining pressure from the unit.
4. Disconnect power supply lines.
5. Dismount hose from Adhesive Supply Unit and Applicator.
6. Disassemble components into mechanical and electrical assemblies.
7. Dispose of components.

Chapter 5
Maintenance and Repair Notes

5.1 Security advices for maintenance and repair

Heed all security advices given in Chapter 2.

Use only original parts from ITW Dynatec, otherwise ITW Dynatec's warranty is void!

Maintenance and repair work is only permitted for skilled personnel!

Always wear safety shoes, heat-resistant protective gloves, safety goggles and protective clothing that cover all vulnerable parts of the body while working on the heated unit! Risk of injury or heavy burns!

High Voltage! Risk of injury and mortal danger!

- All electrical connections must be made by qualified electrical personnel.
- Care must be taken to assure proper grounding prior to any disassembly.
- Lockout and tag the electrical sources as required.
- Make sure there is no electrical power on the leads you will be connecting.
- When covers are removed, high voltage sources create an electrocution hazard.
- Wear appropriate safety equipment when working with high voltage sources.

Parts and surfaces of the unit get very hot. High temperatures! Risk of heavy burns!

High adhesive temperature and adhesive pressure! Risk of injury or heavy burns!
Always assume that the system is under pressure, proceed with caution.

Keep a cool-pack, or bucket of clean water near the work area.

Place a heat-resistant catchment container/underlay under the components. Hot adhesive may come out.

CAUTION: At working temperature, molten adhesive could cause heavy burns. Let spilled out adhesive cool down first, before removing it!

CAUTION: Use only lint-free cleaning cloth and suitable cleaner for cleaning! Do not damage surfaces! Do not scratch above them with sharp-edged tools, otherwise the components will get leaky and inoperable!

All maintenance and repair work has to be done at working temperature, except as noted otherwise. Else there is a risk of damaging the unit components!

Before any service work disconnect the external power supply and switch the unit voltage-free:

1. ,Switch off the main switch and the controller.
2. Disconnect the power supply respectively remove the plug / cable.
3. Guard the unit against unauthorized restarting!

Before any service work the adhesive pressure must be relieved throughout the system. Switch the unit pressureless:

1. Disconnect the pressure air supply.
2. Turn the pressure regulator to zero bar, if necessary. Wait approximately 1 minute until the pressure is relieved.
3. Manually open the solenoid on applicator by pushing (with a small screwdriver or other tool) the purge button located on the solenoid coil. Continue to hold in the purge button until all air and adhesive (pressure) have drained from the module.

5.1.1 Re-Assembly Procedures and General Cautions

Unless noted, the re-assembly is simply the reverse sequence of the disassembly procedures. However, the following “cautions” must be followed (whenever they apply) for proper re-assembly:

CAUTION

In general, all O-RINGS AND SEALS must be replaced whenever hot-melt equipment is re-assembled. All new O-rings must be lubricated with O-ring lube (PN 001V078).

TAPERED PIPE THREADS are found on air pipe fittings used with the pump air supply and on the outlet filter manifold. Apply thread sealant (PN N02892) whenever tapered pipe threaded parts are re-assembled.

SOME FITTINGS used for adhesive on hot melt equipment have straight threads and O-ring seals. Use of thread sealant is not necessary with these parts, but the O-ring seals must be clean and lubricated. Tighten straight-threaded parts and fittings until their shoulders are firmly seated. Excessive torque may damage straight-threaded parts and the use of power wrenches is not recommended.

HOT-MELT RESIDUE must be cleaned from parts before they are re-assembled, particularly from threaded parts. As a precaution against adhesive residue preventing proper re-assembly, threaded parts must always be re-tightened at operating temperature.

5.1.2 Cleaning Recommendation

- Filters are disposable and need to be replaced regularly. DO NOT boil in mineral oil, solvents or water; the sealant used in filter assembly may become brittle and very likely disintegrate when boiled.
- When cleaning other components in mineral oil, remove all non-metallic items (O-rings, seals, filter cartridge, etc.) away from chemicals before components are subjected to hot mineral oil cleaning.
- If there is not a specific rebuild kit available or directions on how to clean a part, please treat it as a replacement item and do not attempt to clean/rebuild.

5.2 Maintenance plan

CAUTION

- Heed all security advices given in Chapter 5.1.
- Use only original parts from ITW Dynatec, otherwise ITW Dynatec's warranty is void!
- Heed the current safety data sheets when handling the hazardous substances (cleaner, etc.).
- Please use only the indicated lubricants and keep the prescribed maintenance intervals. Consider in addition the enclosed regulations of manufactures (if applicable).
- Punctual and conscientious maintenance of the unit secures not only a trouble free function, but prevents also for expensive repair costs.
- Before starting repair or maintenance work, switch the unit voltage-free and pressureless.
- After maintenance work, remove all materials and tools used during the repair or maintenance from the workspace of the unit.
- Place a heat-resistant catchment container/underlay under the components. Hot adhesive may come out.
- Use only lint-free cleaning cloth and suitable cleaner for cleaning! Do not damage surfaces! Do not scratch above them with sharp-edged tools, otherwise the components will get leaky and inoperable!

Maintenance plan:

Operating time/ frequency	Inspection point / maintenance notes
Continuous	• Remove dropped out adhesive and scrap adhesive and search for the cause of that, eliminate the cause.
Once a day	• Clean the Applicator and components from dirt. • Clean the nozzle from adhesive before each production start.
Once a week	• Check the nozzle for proper function and clogging, and clean or replace if necessary. • Check modules on Applicator if leaky and replace if necessary. (Monitor for excess adhesive flow out of "Weep holes" – small amount is normal). • Check the adhesive filter in the Applicator for contamination and clogging, and replace if necessary. • Open the pressure relief screw, to purge and remove contaminants from the filter chamber. • Check the solenoid valves for proper function and replace it if necessary. • Check air supply connections for leaks and tighten if loose or replace if necessary. • Check all hose fittings for leaks and tighten if necessary.
Once a month	• Due to temperature differences a loosening of threads (threaded connections) is possible. Check all parts with threads, all screw fittings and fasteners for tightness and tighten them if necessary.
Once a year	• Clean the Applicator. • Complete check-up for wearing.
Every two years	• Complete maintenance.

5.3 Adhesive Pressure Relief and Purging the Filter Chamber

ADVICE

Heed all security advices given in chapter 5.1.

CAUTION! Risk of burns and injury!

- The unit operates with very high temperatures and high adhesive pressure.
- During this procedure, hot adhesive can come out of the applicator under high pressure.
- Always wear heat-resistant protective gloves, safety goggles and protective clothing! Molten adhesives at operating temperature could cause heavy burns.
- Do not touch the hot surfaces or parts without wearing heat-resistant protective gloves!

1. The applicator must be at operating temperature.

2. Turn the ASU's pump/ motor OFF.
   Switch the unit voltage-free and pressureless.
   Turn the air pressure regulator to zero bar.
   Guard the unit against unauthorized restarting.

3. Place a heat-resistant container/underlay under the applicator. Hot adhesive will come out.

4. With a 5mm hex key (Allen wrench), slowly loosen the purge screw (pressure relief screw) (DO NOT try to remove it) and allow the adhesive and residues to flow out of applicator. Be sure to stand clear since there may be residual adhesive pressure in the applicator.

5. *a. To relieve the adhesive pressure:*
   When the adhesive pressure is relieved, re-tighten the screw.

   b. To purge the filter chamber:
   Turn on the pump/ motor.
   When all the contaminants have run out and the glue is clean, re-tighten the screw.

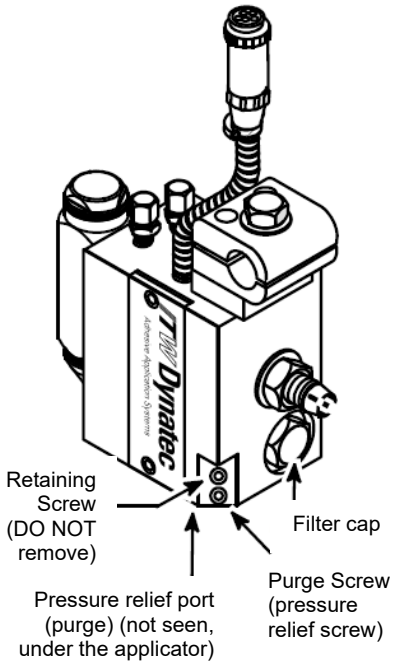

Back View of the BF Applicator

After finishing the maintenance or repair works:

- Remove all materials and tools used during the repair or maintenance from the workspace of the unit.
- Connect the voltage supply and the compressed air supply. Heat the unit up. Wait until all temperatures are within the tolerances and the adhesive in the tank is molten completely.

CAUTION

Before each start of production, purge the Applicator, i.e. let the adhesive flow out until the adhesive is clean and bubble free.

Thereafter switch off the adhesive and clean the nozzle from adhesive.

Continue production.

5.4 Replacement of the Filter Element

ADVICE

Heed all security advices given in chapter 5.1.

Refer to the illustrations under “Ch.3.2 Description and Ch.5.3 Adhesive Pressure Relief”.

CAUTION! Risk of burns and injury!

- The unit operates with very high temperatures and high adhesive pressure.
- During this procedure, hot adhesive can come out of the applicator under high pressure.
- Always wear heat-resistant protective gloves, safety goggles and protective clothing! Molten adhesives at operating temperature could cause heavy burns.
- Do not touch the hot surfaces or parts without wearing heat-resistant protective gloves!

1. The applicator must be at operating temperature.

2. Turn the ASU’s pump/ motor OFF.
   Switch the unit voltage-free and pressureless.
   Turn the air pressure regulator to zero bar.
   Guard the unit against unauthorized restarting.

3. Place a heat-resistant catchment container/underlay under the applicator.
   Hot adhesive will come out.

4. Relieve the adhesive pressure as described under Ch.5.3 Adhesive Pressure Relief.

5. Remove the filter cap with an open wrench and replace the filter element.
   Replace the cap O-ring if defective.

CAUTION

Apply a coat O-ring lube on the O-ring and a coat of anti-seize compound onto the threads of the filter cap before re-installing it.

6. Re-install the filter cap slowly, taking care to seat the cap O-ring without pinching it.

After finishing the maintenance or repair works:

- Remove all materials and tools used during the repair or maintenance from the workspace of the unit.
- Connect the voltage supply and the compressed air supply. Heat the unit up. Wait until all temperatures are within the tolerances and the adhesive in the tank is molten completely.

CAUTION

Before each start of production, purge the Applicator, i.e. let the adhesive flow out until the adhesive is clean and bubble free.

Thereafter switch off the adhesive and clean the nozzle from adhesive.

Continue production.

5.5 Cleaning the Applicator

ADVICE

Heed all security advices given in chapter 5.1.

MAINTENANCE

Check the Applicator regularly for dirt. Dirt can be caused e.g. by burned adhesive and pile up at the supply part, application module or nozzle.

When cleaning, adhere to the actual safety data sheet of the manufacturer of the cleaner!

CAUTION

PUR-adhesives react with air humidity. To avoid blocked nozzles or Applicators, these parts have to be protected airproof with PUR cleaner immediately after production stop or the whole unit must be purged with PUR cleaner.

Nozzles could be protected e.g. with protection caps filled with PUR-cleaner, mounted immediately after production stop.

CAUTION! Risk of burns and injury!

- The unit operates with very high temperatures and high adhesive pressure.
- During this procedure, hot adhesive can come out of the applicator under high pressure.
- Always wear heat-resistant protective gloves, safety goggles and protective clothing! Molten adhesives at operating temperature could cause heavy burns.
- Do not touch the hot surfaces or parts without wearing heat-resistant protective gloves!

Cleaning the Applicator from the adhesive residues:

1. The applicator must be at operating temperature.

2. Turn the ASU's pump/ motor OFF.
   Switch the unit voltage-free and pressureless.
   Turn the air pressure regulator to zero bar.
   Guard the unit against unauthorized restarting.

3. Place a heat-resistant catchment container/underlay under the applicator.
   Hot adhesive may come out!

4. Clean the Applicator from adhesive residues by using a wooden scraper or lint-free cloth with cleaner.

   CAUTION: Do not damage the Applicator with sharp-edged or metallic objects or tools.

After finishing the maintenance or repair works:

- ➢ Remove all materials and tools used during the repair or maintenance from the workspace of the unit.
- ➢ Connect the voltage supply and the compressed air supply. Heat the unit up. Wait until all temperatures are within the tolerances and the adhesive in the tank is molten completely.

CAUTION

Before each start of production, purge the Applicator, i.e. let the adhesive flow out until the adhesive is clean and bubble free.

Thereafter switch off the adhesive and clean the nozzle from adhesive.

Continue production.

5.6 Demounting and Cleaning the Nozzle

ADVICE

Heed all security advices given in chapter 5.1.

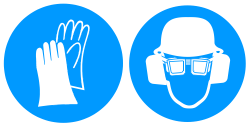

CAUTION! Risk of burns and injury!

- The unit operates with very high temperatures and high adhesive pressure.
- During this procedure, hot adhesive can come out of the applicator under high pressure.
- Always wear heat-resistant protective gloves, safety goggles and protective clothing! Molten adhesives at operating temperature could cause heavy burns.
- Do not touch the hot surfaces or parts without wearing heat-resistant protective gloves!

Occasionally nozzles can become clogged with char, residue or other foreign material. This can result in the decrease or even stoppage of glue flow. ITW Dynatec has two **Nozzle Cleaning Kits** available, which are orifice-size specific:

- PN 101877 Nozzle Cleaning Kit: 0.010 to 0.017 orifice
- PN 101878 Nozzle Cleaning Kit: 0.018 to 0.040 orifice

1. The nozzle (applicator) must be at operating temperature.

2. Turn the ASU's pump/ motor OFF.
   Switch the unit voltage-free and pressureless.
   Turn the air pressure regulator to zero bar.
   Guard the unit against unauthorized restarting.

3. Place a heat-resistant catchment container/underlay under the applicator.
   Hot adhesive will come out.

4. Relieve the adhesive pressure as described under Ch.5.3 Adhesive Pressure Relief.

5. Remove the nozzle retaining nut and nozzle with a 14mm open wrench.

6. Use the reamers in the kit to clear the orifice.
   Since there are several orifice sizes available, first make sure that the reamer is compatible with the orifice size you are about to clean.
   Carefully insert the reamer into the tip of the nozzle.

CAUTION

If a reamer of too large a diameter is used to clean the orifice, it could result in a broken reamer jammed in the nozzle, or damage to the nozzle itself.

After finishing the maintenance or repair works:

- ➢ Remove all materials and tools used during the repair or maintenance from the workspace of the unit.
- ➢ Connect the voltage supply and the compressed air supply. Heat the unit up. Wait until all temperatures are within the tolerances and the adhesive in the tank is molten completely.

CAUTION

Before each start of production, purge the Applicator, i.e. let the adhesive flow out until the adhesive is clean and bubble free.

Thereafter switch off the adhesive and clean the nozzle from adhesive.

Continue production.

5.7 Replacement of the Application Module

ADVICE

Heed all security advices given in chapter 5.1.

CAUTION! Risk of burns and injury!

- The unit operates with very high temperatures and high adhesive pressure.
- During this procedure, hot adhesive can come out of the applicator under high pressure.
- Always wear heat-resistant protective gloves, safety goggles and protective clothing! Molten adhesives at operating temperature could cause heavy burns.
- Do not touch the hot surfaces or parts without wearing heat-resistant protective gloves!

1. The applicator must be at operating temperature.

2. Turn the ASU's pump/ motor OFF.
   Switch the unit voltage-free and pressureless.
   Turn the air pressure regulator to zero bar.
   Guard the unit against unauthorized restarting.

3. Place a heat-resistant catchment container/underlay under the applicator.
   Hot adhesive will come out.

4. Relieve the adhesive pressure as described under Ch.5.3 Adhesive Pressure Relief.

5. Remove the module from the service block by removing the two special shoulder screws on the front of the module with a 4mm (5/32") hex key (Allen wrench). Make sure that the three old O-rings located on the back of the module are also removed (the new module will include three new O-rings).

6. Clean the adhesive residuals from on the applicator.

7. Mount the new module using a 4mm (5/32") hex key on the two special shoulder screws with a torque of 15 in-lb (1.7 Nm) maximum.

After finishing the maintenance or repair works:

- Remove all materials and tools used during the repair or maintenance from the workspace of the unit.
- Connect the voltage supply and the compressed air supply. Heat the unit up. Wait until all temperatures are within the tolerances and the adhesive in the tank is molten completely.

CAUTION

Before each start of production, purge the Applicator, i.e. let the adhesive flow out until the adhesive is clean and bubble free.

Thereafter switch off the adhesive and clean the nozzle from adhesive.

Continue production.

5.7.1 PN 118700 Module with 1-inch (25.4mm) slot die replacement for older versions

- Older versions include module PN 118101 and the die clamps at an angle:

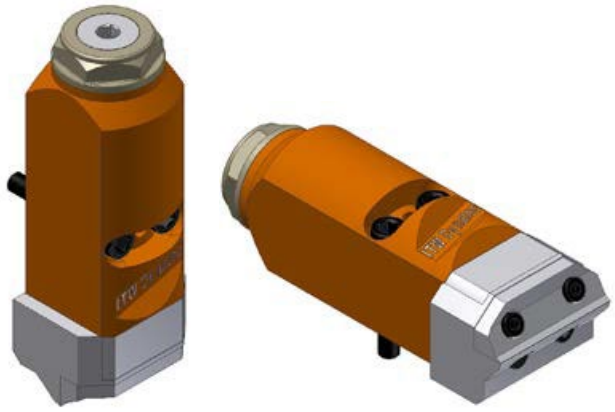

- Remove die lip assembly and seat from module.

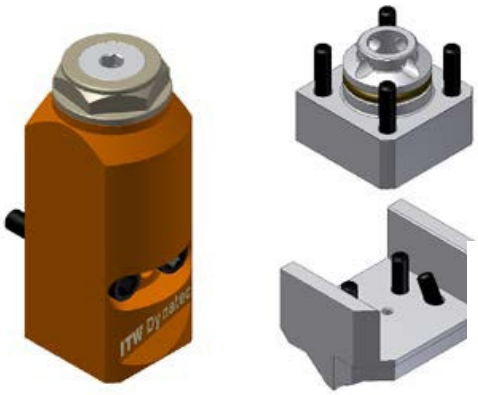

Step 2:
Remove seat from module.

Step 1:
Remove die lip assembly.

- Install new version die lip and seat assembly onto module.
- Verify stroke adjustment to 2 turns (1mm travel).
- NOTE: Recommended torque for #4-40 screws = 2Nm (18 in/lb).

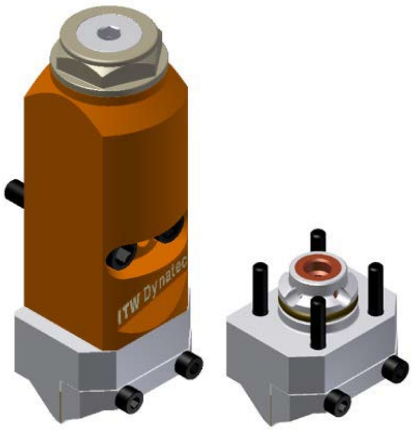

5.8 Stroke Limit Adjustment of the PN 110639 Adjustable Marathon Module

ADVICE

Heed all security advices given in chapter 5.1.

CAUTION! Risk of burns and injury!

- The unit operates with very high temperatures and high adhesive pressure.
- Always wear heat-resistant protective gloves, safety goggles and protective clothing! Molten adhesives at operating temperature could cause heavy burns.
- Do not touch the hot surfaces or parts without wearing heat-resistant protective gloves!

NOTE: This procedure can be performed only on the adjustable marathon module, which can be identified by its adjustment plate and locking set screw at the top of the module.

1. The applicator must be at operating temperature.

2. Turn the ASU's pump/ motor OFF.
   Switch the unit voltage-free and pressureless.
   Turn the air pressure regulator to zero bar.
   Guard the unit against unauthorized restarting.

3. Using 4mm hex key wrench, screw-in the set screw to touch the cap (DO NOT force the set screw) and unscrew the set screw 1.5 turn to have the required standard 0.75mm stroke.

5.9 Testing and Replacement of the Heater Cartridges and Temperature Sensor

5.9.1 Testing of the Heater Cartridges and Temperature Sensor

ADVICE

Heed all security advices given in chapter 5.1.

Only authorized skilled personnel may carry out the following work.

1. Turn the ASU's pump/ motor OFF.
   Turn the air pressure regulator to zero bar.

2. Unplug the electrical cable from the adhesive supply hose to expose the pins in the cable.

NOTE: Pin connectors and pinout numbers will vary depending on the control scheme of the applicator (Dynacontrol or Upgrade NOR).

Pin Connectors & Electrical Schematics:

NOTE: Pin connectors are viewed from the exposed end. Pins not shown on schematics are not used.

DynaControl/Dynamini Uses PN N07958 RTD Sensor, Pt100:

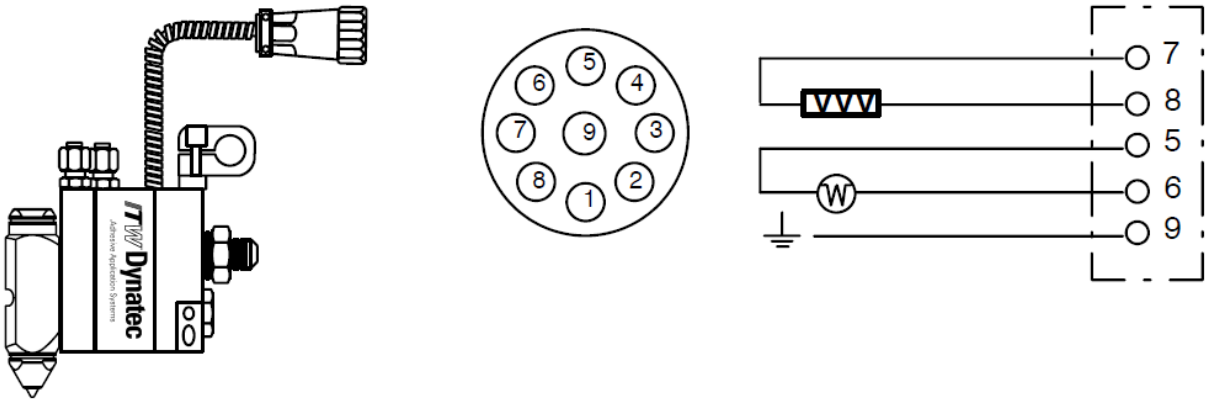

Upgrade (NOR) Uses PN N07864 RTD Sensor, Ni120:

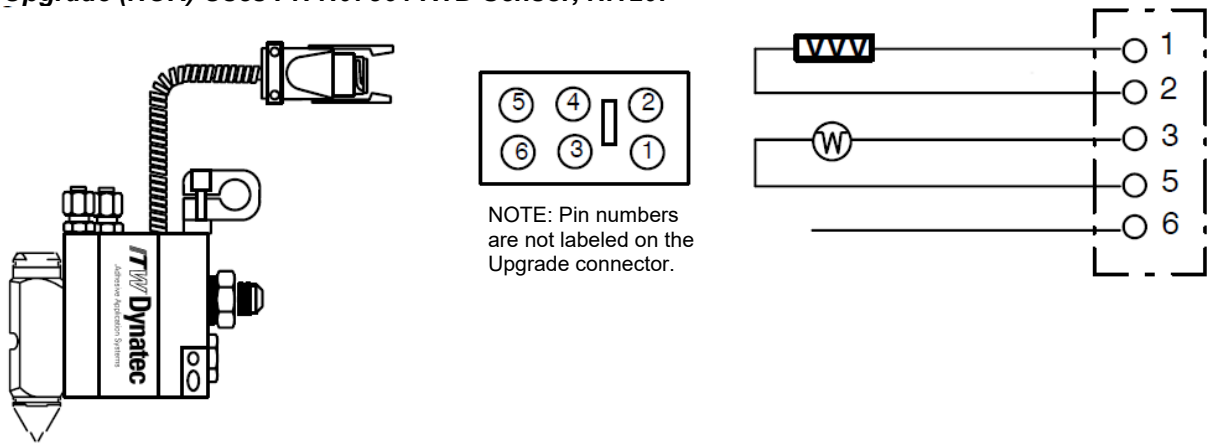

Testing Resistance of the Heater Cartridge

1. The resistance value (Ohm) of your heater cartridge may be obtained from the chart below, or it may be calculated using the formula:

Operation voltage ² of the Applicator (Volt²)	= Resistance (Ohm)
Power consumption of the Applicator (Watt)	

120VAC			200VAC			240VAC			200-240VAC	
Watt	Ohm		Watt	Ohm		Watt	Ohm		Watt	Ohm
200	72		200	200		220	245		400	144
240	60								475	121
320	45								585	98
360	40								775	74
500	29								960	60
600	24									

2. **For DynaControl or Dynamini:**
   With an Ohmmeter, contact pins 7 and 8 and measure resistance.

   For Upgrade (NOR):
   With an Ohmmeter, contact pins 1 and 2 and measure resistance.

   NOTE: A tolerance range of ± 5% is allowed. A heater cartridge that tests outside of this range must be replaced.
   Replacement instructions follow in this chapter.

Testing Resistance of the RTD Temperature Sensor

1. The resistance value (Ohm) of your temperature sensor depends on the temperature of the sensor at the time it is being tested.
   At 25°C (77°F), the resistance of a PT 100 (Platinum) sensor should be 110 Ohm.
   At 25°C (77°F), the resistance of a N120 (Nickel) sensor should be 138 Ohm.

2. **For DynaControl/Dynamini:**
   With an ohmmeter, contact pins 5 and 6 and measure resistance.

   For Upgrade (NOR):
   With an ohmmeter, contact pins 3 and 5 and measure resistance.

   NOTE: A tolerance range of ± 10% is allowed. A sensor that tests outside of this range must be replaced.
   Replacement instructions follow in this chapter.
   See Resistance Tables of Temperature Sensors on next page.

5.9.2 Resistance Tables, Temperature sensors

Temperature sensor PT100 Ohm
Control option: DCL

Temperature °F	°C	Resistance in Ohm
32	0	100
50	10	104
68	20	108
86	30	112
104	40	116
122	50	119
140	60	123
158	70	127
176	80	131
194	90	135
212	100	139
230	110	142
248	120	146
268	130	150
284	140	154
302	150	157
320	160	161
338	170	164
356	180	168
374	190	172
392	200	176
410	210	180
428	220	183

Temperature sensor Ni120 Ohm
Control option: NOR

Temperature °F	°C	Resistance in Ohm
32	0	120
50	10	127
68	20	135
86	30	142
104	40	150
122	50	158
140	60	166
158	70	174
176	80	183
194	90	192
212	100	201
230	110	210
248	120	219
268	130	229
284	140	239
302	150	249
320	160	259
338	170	270
356	180	284
374	190	292
392	200	303
410	210	315
428	220	328

5.9.3 Replacement of the Heater Cartridge or Temperature Sensor

ADVICE

Heed all security advices given in chapter 5.1.

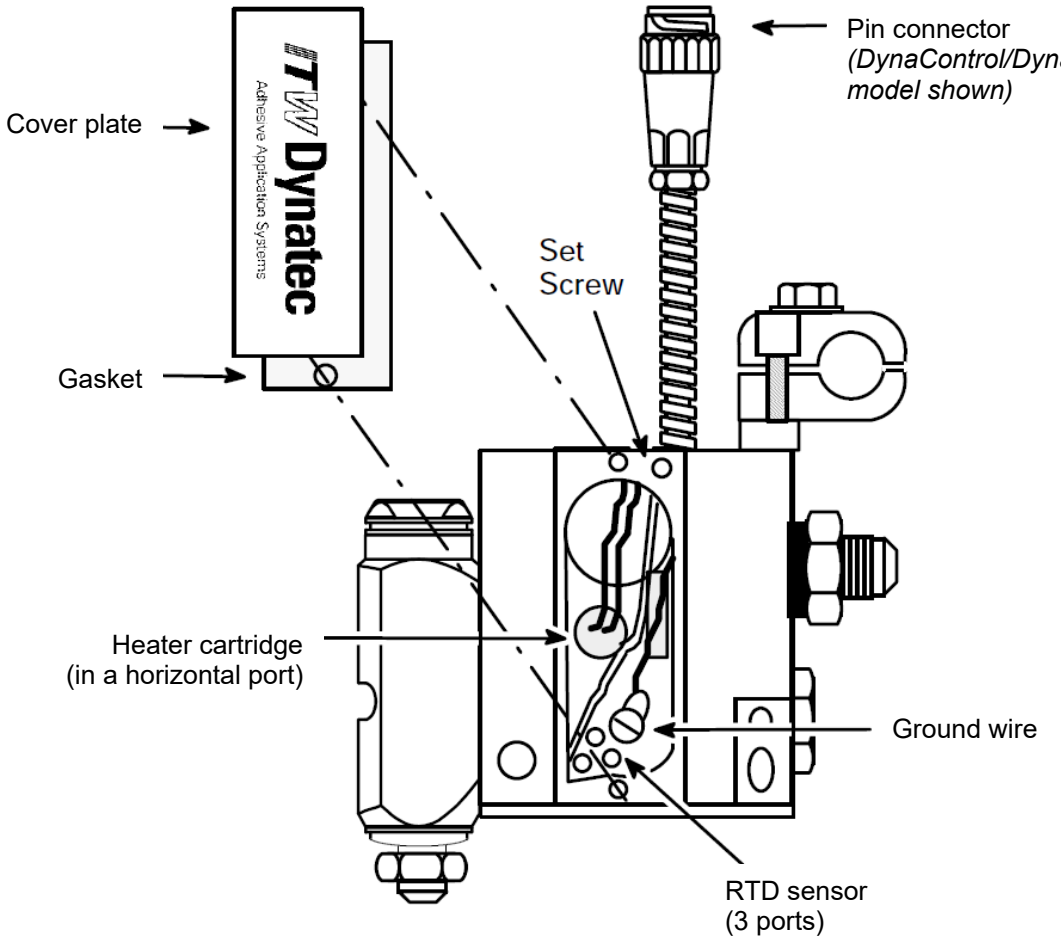

Heater/ RTD Sensor Replacement Diagram

ITW Dynatec has a High Temp Heater Splice Kit available (PN 102645). Each kit contains sufficient connectors and shrink tube to replace a heater cartridge (the heater is ordered separately).

1. Turn the ASU's pump/ motor OFF.
   Turn the air pressure regulator to zero bar.

2. Disconnect the electrical cable assembly from the hose.

3. Remove the wire access cover plate and the gasket via two holding screws.

4. If replacing heater (only): Cut the wires of the heater cartridge at the splice.

5. Pull the heater (or sensor) out of the service block.

6. Apply a thin coat of thermal paste (PN 001V061) to the new cartridge heater (or new sensor).

7. Put new cartridge heater (or new sensor) in service block. If replacing heater: connect its wires with splice and shrink tube.

8. Replace access cover plate and gasket.

After finishing the maintenance or repair works:

- Remove all materials and tools used during the repair or maintenance from the workspace of the unit.
- Connect the voltage supply and the compressed air supply. Heat the unit up. Wait until all temperatures are within the tolerances and the adhesive in the tank is molten completely.

CAUTION

Before each start of production, purge the Applicator, i.e. let the adhesive flow out until the adhesive is clean and bubble free.

Thereafter switch off the adhesive and clean the nozzle from adhesive.

Continue production.

Chapter 6
Troubleshooting

ADVICES:
Please re-read all security advices given in Chapter 2 before troubleshooting.
All troubleshooting or repair procedures must be performed by qualified, trained technicians.

The temperatures measured on the outer surface may deviate significantly from the temperatures set and displayed. This can lead to a false conclusion (e.g. defective heating). Such a difference is normal and depends also largely on the materials used.

In general: If failure occurs, check first:
- Check all the electrical and pneumatic connections.
- Verify that the Applicator has sufficient compressed air and it is heating properly.
- Verify that the main power switch at the Adhesive Supply Unit is ON.
- Verify that the pump is functioning and the required adhesive pressure is present.
- Verify that the temperature controller is in operation and that the setpoints are correct for the Melter, Heated Hoses, Applicator and all other components connected to the unit. Check to see if all components are heating properly.

CAUTION! Risk of burns and injury!

- The unit operates with very high temperatures and high adhesive pressure.
- Always wear heat-resistant protective gloves, safety goggles and protective clothing! Molten adhesives at operating temperature could cause heavy burns.
- Do not touch the hot surfaces or parts without wearing heat-resistant protective gloves!

Problem	Possible Cause	Solution
1. Module does not open.	1. Temperature adjustment of hopper (tank), hose or applicator is too low. 2. Solenoid valve defective. 3. Compressed air for Applicator is too low. 4. Standby activated.	1. Check temperature adjustment. 2. Check solenoid valve. Push the solenoid's manual button. If it opens, the problem is electrical. 3. Check compressed air; this should be 6 bar. 4. Deactivate standby.
2. No adhesive flowing out of module.	1. Nozzle is clogged. 2. Filter element is dirty. 3. Module (or its seals) defective. 4. ASU's hopper (tank) is empty. 5. Adhesive is too cold. 6. Solenoid valve is not opening.	1. Clean or replace nozzle. 2. Clean or replace filter. 3. Replace module. 4. Re-fill hopper (tank). 5. Check temperature settings. 6. Check solenoid valve. Push the solenoid's manual button. If it opens, the problem is electrical.

3. Adhesive is coming out of the module's "weep" holes.	1. Module seals are damaged.	1. Replace module.
4. Applicator does not reach operating temperature.	1. Temperature settings wrong. 2. Heater cartridge defective. 3. Temperature sensor defective.	1. Reset temperature settings. 2. Check heater cartridge and replace if necessary. 3. Check temperature sensor and replace if necessary.
5. Applicator is too hot	1. Temperature setpoint is too high. 2. Temperature sensor defective. 3. Controller defective.	1. Check temperature settings and reset if necessary. 2. Check temperature sensor and replace if necessary. 3. Replace controller.
6. Air escapes from module	1. Inoperative piston seal. 2. O-rings located at the rear side of module (between module and service block) are defective.	1. Replace module. 2. Remove module and replace O-rings.
7. Application pattern is erratic	1. Adhesive pressure too low. 2. Pattern controller settings are wrong. 3. Air is in system.	1. *For units without speed control:* increase adhesive pressure at ASU. *For units with speed control (tach follower):* adjust pump speed control. 2. Adjust Pattern controller settings. See Pattern controller manual for proper adjustment. 3. Purge air from system.
8. Adhesive flow is tearing off.	1. Temperature too low.	1. Increase temperature.
9. Adhesive amount too high.	1. Nozzle orifice too large. 2. Temperature too high. 3. Adhesive pressure too high.	1. Change nozzle (module). 2. Reset temperature. 3. Decrease adhesive pressure at the Adhesive Supply Unit.

Chapter 7
Drawings & Bills of Materials

WARNING

All parts must be periodically inspected and replaced if worn or broken. Failure to do this can affect equipment's operation and can result in personal injury.

This chapter contains the component illustrations (exploded-view drawings) for each assembly. These drawings are useful for finding part numbers as well as for use when maintaining or repairing the equipment.

Note: Most common screws, nuts and washers called out in the manual are not for sale and they can be obtained locally at your hardware Store. Specialty fasteners are available by contacting ITW Dynatec's Customer Service.

7.1 Typical Dyna BF Mod-Plus Marathon Applicator

Item	Part number	Description	Qty
1	110639	Adjustable Marathon Module	1
3	L13533	Aluminum Tubing .25” OD x 8” Long (Ø6.35x203mm)	2
4	101625	Fitting Plug	1
5	101624	Fitting Adapter with Ring	1
6	101628	Screw M3-5 x 8mm	4
7	103347	Identification Plate	1
8	103466	Service Block, BF0441*	1
	104260	Service Block, BF0442*	1
	104261	Service Block, BF0662*	1
	118307	Service Block, BF0883**	1
	104262	Service Block, BF0884**	1
	104263	Service Block, BF1104**	1
	104264	Service Block, BF1546**	1
	104265	Service Block, BF1988**	1
9	101833	Tamper Proof Screw (retaining screw) 10-32 x 1/2	1
10	104852	Pressure relief Screw M10-1.5 x 12 Cone, SSS,	1
11	102447	Screw M5 x 25 SHC	2
12	101620	Filter cap, BF Head	1
13	101618	Filter, 100 mesh (standard BF)	1
	113311	Filter, 200 mesh (standard Optima)	1
14	104129	Mounting Clamp	1* or 2**
15	L14899	Insulator, Mounting Clamp	1* or 2**
16	103467	**Cable Assembly for DynaControl 240V** (incl. N07958 RTD temp. sensor PT100, Ø .1875X1.25L (Ø 4.76x31.75mm)	1
	104521	**Cable Assembly for DynaControl 120V** (incl. N07958 RTD temp. sensor PT100, Ø .1875X1.25L (Ø 4.76x31.75mm)	1
	104528	**Cable Assembly for Upgrade NOR 240V** (incl. N07864 RTD temp. sensor NI120, Ø .1875X1.25L (Ø 4.76x31.75mm)	1
	115036	**Cable Assembly for Upgrade NOR 120V** (incl. N07864 RTD temp. sensor NI120, Ø .1875X1.25L (Ø 4.76x31.75mm)	1
	104127	**Cable Assembly for DynaControl 240V, Washdown** (incl. N07958 RTD temp. sensor PT100, Ø .1875X1.25L (Ø 4.76x31.75mm)	1
	104522	**Cable Assembly for DynaControl 120V, Washdown** (incl. N07958 RTD temp. sensor PT100, Ø .1875X1.25L (Ø 4.76x31.75mm)	1
	104529	Cable Assembly for Upgrade NOR 240V, Washdown (incl. N07864 RTD temp. sensor NI120, Ø .1875X1.25L (Ø 4.76x31.75mm)	1
17	101622	Gasket, Wire Access	2
18	103733	Wire Access Cover Plate	1
19	N00093	Fitting Connector	2
20	101627	Cheese (Head Screw Phillips) M3-.5 x 6	1
21	N04268	Terminal Ring	1
22	078C088	Washer #4	1
23	104128	Heater Ø12.5x33mm, 220W, (240V) (see Options under Ch.8 Ordering Guide)	1
24	N01756	Parallel Connector	2
25	048J271	Shrink Tube	1 ft.
26	N00695	Lock Washer #10	2
27	N01124	Level Seal Plug 1/16 NPT	1
28	N00196	O-ring #111	1
29	N00186	O-ring #019	1
30	103470	Flat Point Socket Head Set Screw M3-5 x 4	2
31	N07830	Fitting (optional) 90°	1
32	N07831	Fitting (optional) 45°	1

33	N00181	O-ring #014	1
34	N07958	RTD temp. sensor PT100, Ø .1875X1.25L (Ø 4.76x31.75mm) (part of Cable asy, see Options Ch.8 Ordering Guide)	1
35	N00179	O-ring #012	1
36	109551	Cable Entry Plug	1

* Service block needs 1 of each items 14 and 15.
** Service block needs 2 of each items 14 and 15.

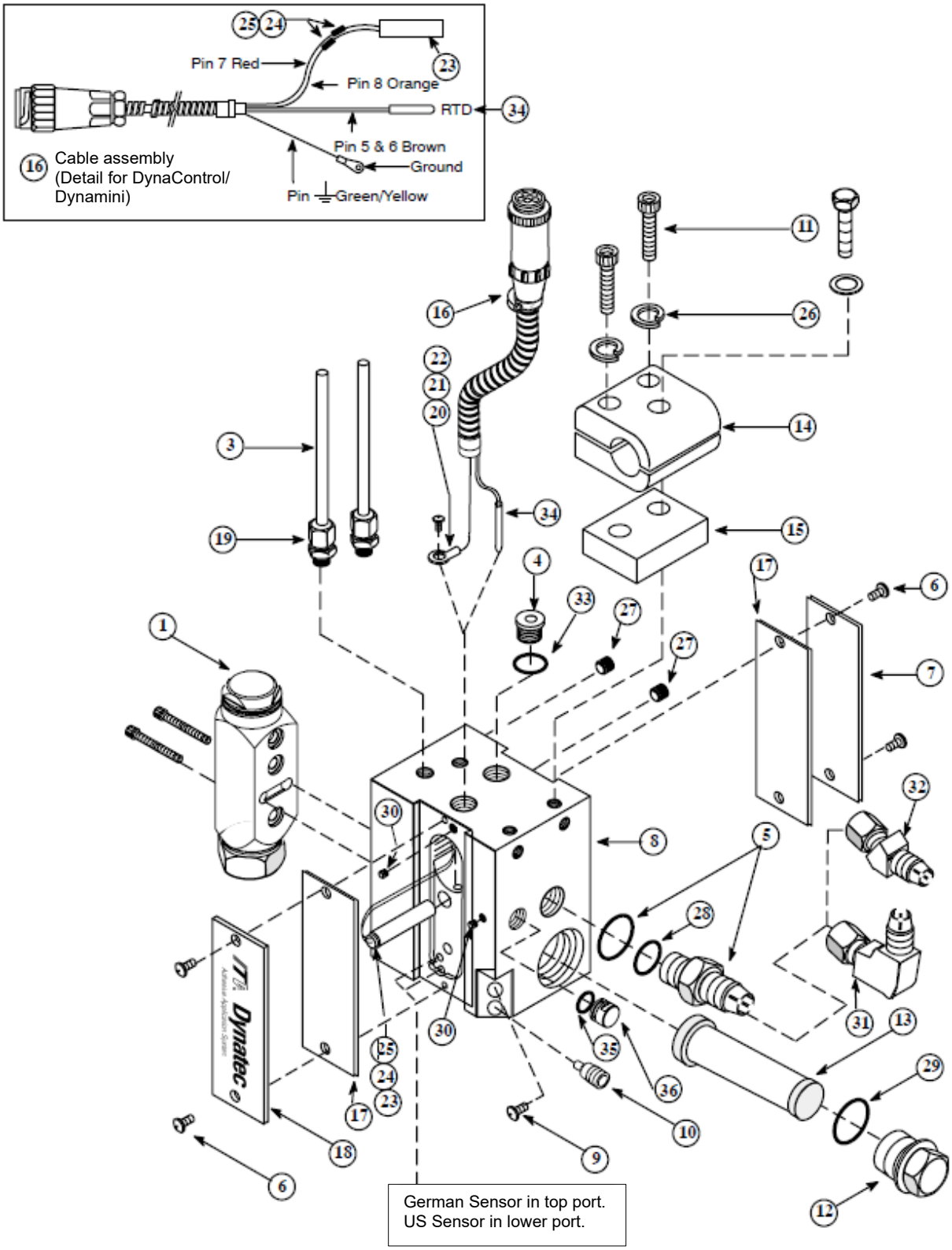

Illustration: Typical Dyna BF Mod-Plus Marathon Applicator
(DynaControl/Dynamini version illustrated)

7.2 ModPlus Swirl Module Assembly PN 118148

Item	Part number	Description	Qty
1	118148	Module Assembly, Mod Plus Swirl (sold as an assembly only)	1
2	N00175	O-ring #008	3
3	N00801	Screw, 8-32 x 1.0” SHCS	2
4	N06433	10-32 Pan Head Plug	1
5	L18789	Adapter, Nozzle	1
6	L19610	Baffle	1
7	N06431	Swivel	1
8	N06432	Fitting Barb	1
9	8842	Screw Retaining O-ring	2

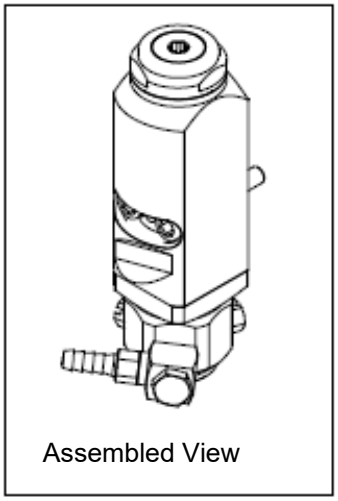

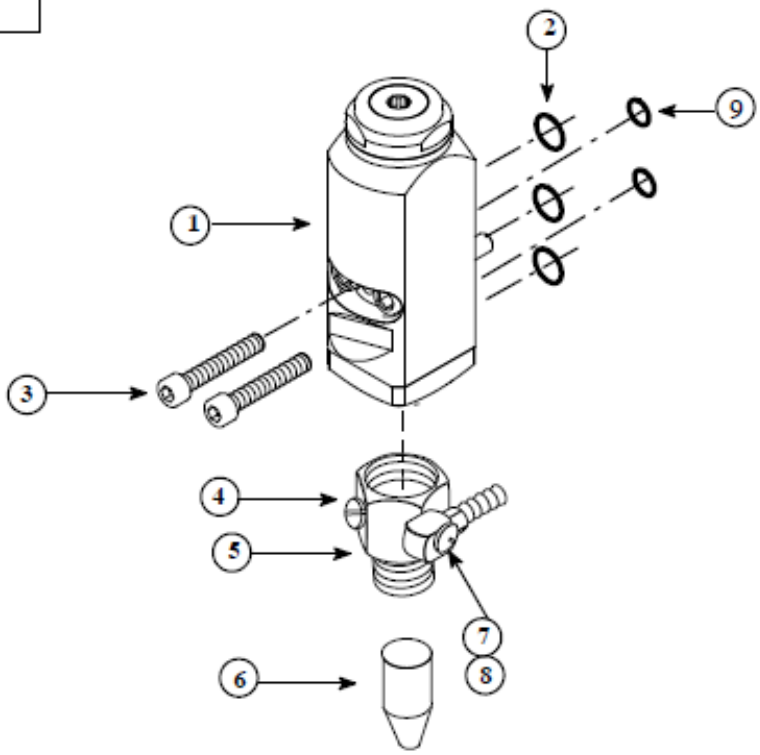

7.3 Extended Module Assembly PN 118150

Item	Part number	Description	Qty
1	118150	Extended Module Assembly (sold as an assembly only)	1
2	N00175	O-ring #008	3
3	N00801	Screw, 8-32 x 1.0” SHCS	2
4	L06223	Nozzle retaining nut	1
5	8842	Screw Retaining O-ring	2

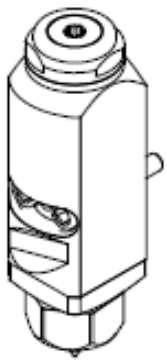

Assembled View

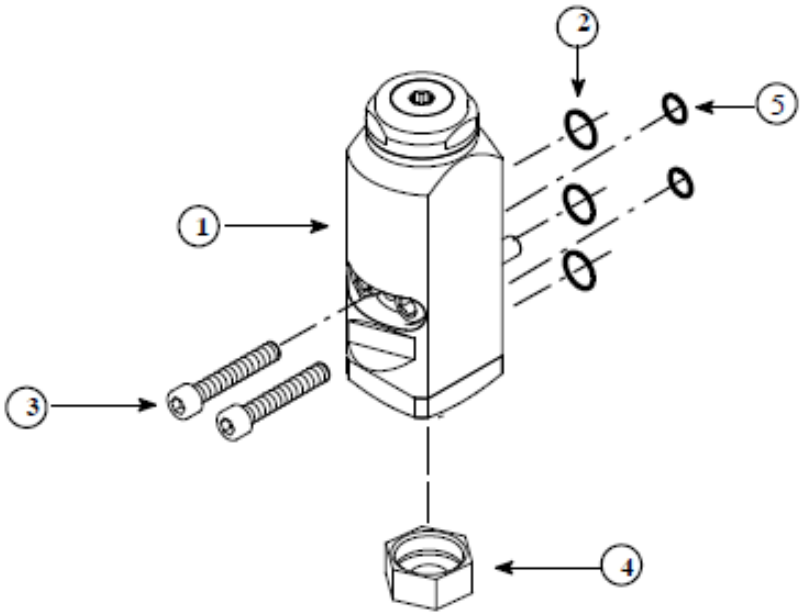

7.4 BF Head Assembly with 3 Port Shoe Nozzle, PN 802843, and BF Head Assembly with 6 Port Shoe Nozzle, PN 802844

Item	PN	Description	Qty
1	118149	Mod Plus Shoe Nozzle Module Assembly	1
2	802779	Shoe Spacer	1
3	078A373	Screw 6-32 x 1 1/4 SHC	2
	802842	**Service Body Assembly:**	**1**
4	L13533	Aluminum Tubing .25” OD x 8” Long	2
5	101625	Fitting Plug	1
6	101624	Fitting Adapter with Ring	1
7	101628	Screw M3-5 x 8mm	4
8	103347	Identification Plate	1
9	802764	Service Block	1
10	101833	Tamper Proof Screw (retaining screw) 10-32 x 1/2	1
11	104852	Pressure relief Screw M10-1.5 x 12 Cone, SSS,	1
12	N07419	Screw M5 x 30 SHC	2
13	101620	Filter cap, BF Head	1
14	-	(not used)	-
15	101618	Filter, 100 mesh	1
16	104129	Mounting Clamp	1
17	L14899	Insulator, Mounting Clamp	1
18	103467	**Cable Assembly for DynaControl 240V** (incl. N07958 RTD temp. sensor PT100, Ø .1875X1.25L (Ø 4.76x31.75mm)	1
19	101622	Gasket, Wire Access	2
20	103733	Wire Access Cover Plate	1
21	N00093	Fitting Connector	2
22	101627	Cheese (Phillips) Head Screw M3-.5 x 6	1
23	N04268	Terminal Ring	1
24	078C088	Washer #4	1
25	104128	Heater Ø12.5x33mm, 220W, (240V) (see Options under Ch.8 Ordering Guide)	1
26	N01756	Parallel Connector	2
27	048J271	Shrink Tube	1 ft.
28	N00695	Lock Washer #10	2
29	N01124	1/16 NPT Level Seal Plug	1
30	N00196	O-ring #111	1
31	N00186	O-ring #019	1
32	103470	Flat Point Socket Head Set Screw M3-5 x 4,	1
33	N00181	O-ring #014	1
34	N07958	RTD temp. sensor PT100, Ø .1875X1.25L (Ø 4.76x31.75mm) (part of Cable asy, see Options Ch.8 Ordering Guide)	1
35	104390	Pin, Spring Roll	2
	084B1851	**Shoe Nozzle Assembly, 6 Nozzle (used with BF Head 802844)**	
36	N00793	Screw 6-32 x 5/8 SHC	2
37	036A016	Heater, 90W, 240V, 1/4” x 3” (Ø6.35x76.2mm)	2
38	048D324	Cover Plate, Shoe, Brass	1
39	057B2142	Nozzle, Bar, Shoe, 6 Nozzle, 5/8,Heater	1
40	N00767	Screw 8-32 x 1/4” SHS	3
41	078A373	Screw 6-32 x 1 1/4 SHC	4
42	048J049	Conduit Fitting	1
43	116323	Button Head Screw 6- 32 x 3/16	1
	084B1852	**Shoe Nozzle Assembly, 3 Nozzle (used with BF Head 802843)**	
44	N00793	Screw 6-32 x 5/8 SHCS	2
45	036A016	Heater, 90W, 240V, 1/4” x 3” (Ø6.35x76.2mm)	2
46	048D324	Cover Plate, Shoe, Brass	1
47	057B2143	Nozzle, Bar, Shoe, 3 Nozzle, 5/8,Heater	1
48	N00767	Screw 8-32 x 1/4” SHS	3
49	8398	Screw 4-40 x 1 1/4 SHC	4
50	048J049	Conduit Fitting	1
51	116323	Button Head Screw 6- 32 x 3/16	1
52	8397	Washer, Lock, 3.10 x 6mm, 1mm	8

Note: screws & washers are part of the module assy. Shown for reference only.

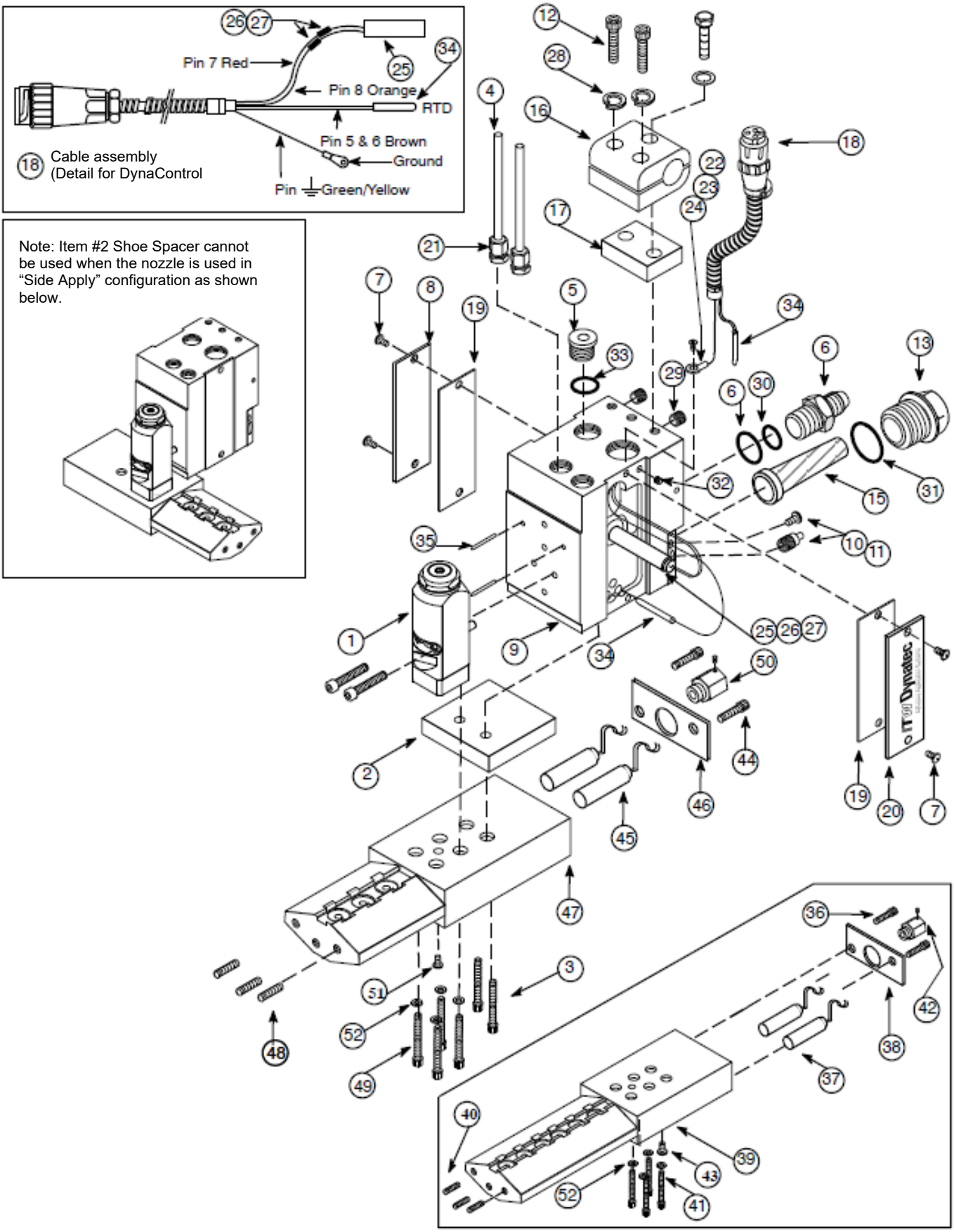

Illustration: BF Head Assembly with 3 Port Shoe Nozzle, PN 802843,
BF Head Assembly with 6 Port Shoe Nozzle, PN 802844

7.5 Slot Die Module Assembly, PN 118700

Item	Part number	Description	Qty
1	118699 *	Nozzle assembly, 1-inch (25.4mm), RibbonCoater	1
4	150007	ModPlus Module assembly	1
5	N00801	Screw, SHC, #8-32,1.00	2
6	N00175	O-ring 008	3
7	118781	O-ring 3.5mm ID x 1.3mm wide	2
9 *	L21334	Shim blank, 1” (25.4mm), thickness .004” (0.10mm) (standard shim), (not shown)	5

* see separate drawing and BOM.

9 * NOTE:
Brass shim blanks (item 9, not shown) are supplied with every module / slot nozzle assembly.
Other shim blanks are available in following thickness:

- .003” / 0.076mm (PN L21333)
- .005” / 0.127mm (PN L21335)
- .010” / 0.254mm (PN L21336)
- .015” / 0.381mm (PN L21337)

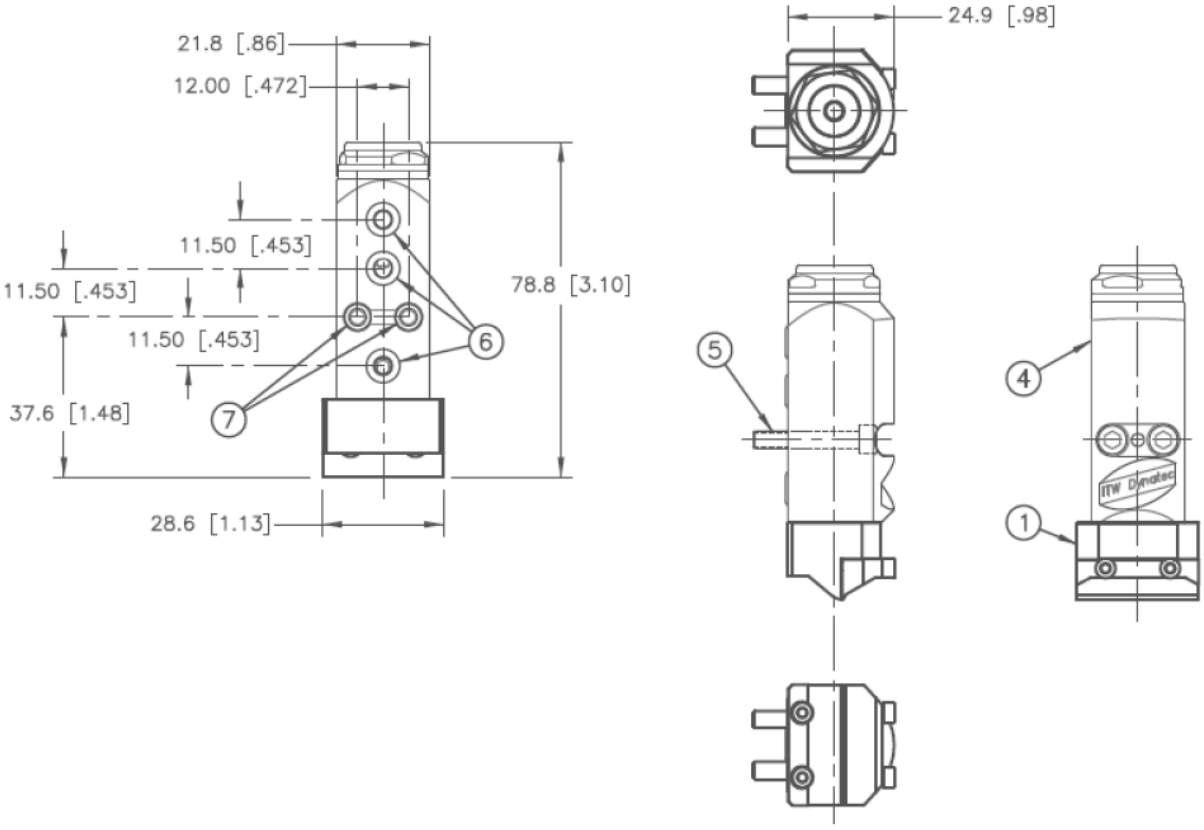

7.6 Nozzle Assembly 1.0 Inch Ribbon Coater, PN 118699

Item	Part number	Description	Qty
1 *	L21334	Shim blank, 1” (25.4mm), thickness .004” (0.10mm) (standard shim)	5
2	150009	O-ring 11mm	1

1 * NOTE:
Brass shim blanks (item 1) are standard shims and supplied with every module / slot nozzle assembly. Other shim blanks are available in following thickness:

- .003” / 0.076mm (PN L21333)
- .005” / 0.127mm (PN L21335)
- .010” / 0.254mm (PN L21336)
- .015” / 0.381mm (PN L21337)

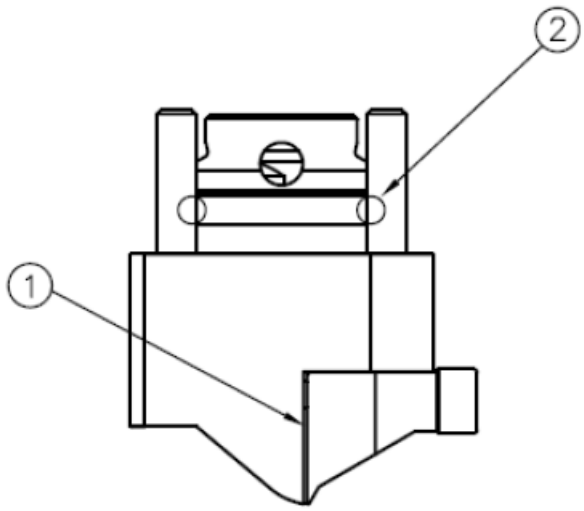

7.7 Blank ModPlus Module assembly, PN L18500

Item	Part number	Description	Qty
1	L18700	Blank Module	1
2	L18038	Shoulder screw	2
3	N00175	O-ring 008	3

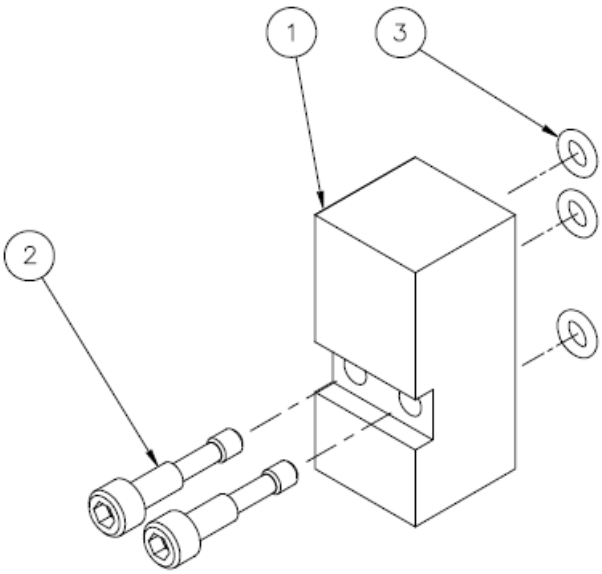

7.8 ModPlus Module for Shoe-Nozzle, PN 118149

Item	Part number	Description	Qty
1	118149	ModPlus Module for Shoe-Nozzle	1
2	8854	O-ring 4.47x1.78 mm	3
3	8842	O-ring 3.5x1.3 mm	2
4	N00801	Screw 8-32x1,BLK	2

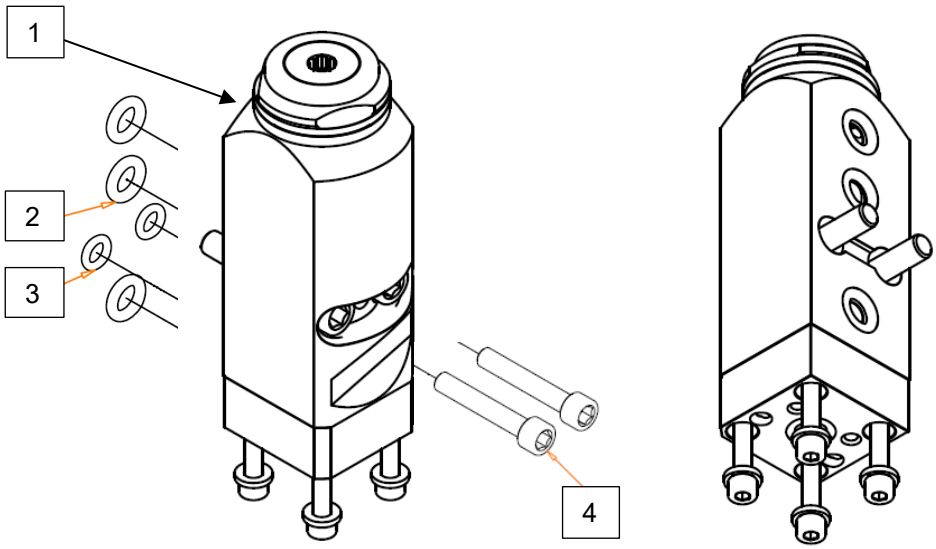

Chapter 8
Ordering Guide, Options & Recommended Spare Parts

8.1 Mod-Plus Single Orifice Nozzles

Part number EZ-style	Part number EZ-style	Orifice Diameter	Orifice Length
100706	L19965	0.25mm (0.010 inch)	1.27mm (0.050 inch)
100707	L19966	0.30mm (0.012 inch)	1.27mm (0.050 inch)
100709	L19967	0.38mm (0.015 inch)	1.91mm (0.075 inch)
100710	L19968	0.51mm (0.020 inch)	1.91mm (0.075 inch)
100711	L19969	0.64mm (0.025 inch)	1.91mm (0.075 inch)
100712	L19970	0.76mm (0.030 inch)	1.91mm (0.075 inch)
100713	L19971	0.89mm (0.035 inch)	1.91mm (0.075 inch)
100714	L19972	1.02mm (0.040 inch)	1.91mm (0.075 inch)

8.2 Mod-Plus Multi-Orifice Nozzles

Part number	Number of Orifices	Orifice Diameter	Angle
L09350-1015	2	0.25mm (0.010 inch)	15°
L09350-1022	2	0.25mm (0.010 inch)	22°
L09350-1030	2	0.25mm (0.010 inch)	30°
L09350-1045	2	0.25mm (0.010 inch)	45°
L09350-1060	2	0.25mm (0.010 inch)	60°
L09350-1090	2	0.25mm (0.010 inch)	90°
L09350-1515	2	0.38mm (0.015 inch)	15°
L09350-1522	2	0.38mm (0.015 inch)	22°
L09350-1530	2	0.38mm (0.015 inch)	30°
L09350-1545	2	0.38mm (0.015 inch)	45°
L09350-1560	2	0.38mm (0.015 inch)	60°
L09350-1590	2	0.38mm (0.015 inch)	90°
L09350-2015	2	0.51mm (0.020 inch)	15°
L09350-2022	2	0.51mm (0.020 inch)	22°
L09350-2030	2	0.51mm (0.020 inch)	30°
L09350-2045	2	0.51mm (0.020 inch)	45°
L09350-2060	2	0.51mm (0.020 inch)	60°
L09350-2090	2	0.51mm (0.020 inch)	90°
L09350-2515	2	0.64mm (0.025 inch)	15°
L09350-2522	2	0.64mm (0.025 inch)	22°
L09350-2530	2	0.64mm (0.025 inch)	30°
L09350-2545	2	0.64mm (0.025 inch)	45°
L09350-2560	2	0.64mm (0.025 inch)	60°
L09350-2590	2	0.64mm (0.025 inch)	90°
L09350-3015	2	0.76mm (0.030 inch)	15°

L09350-3022	2	0.76mm (0.030 inch)	22°
L09350-3030	2	0.76mm (0.030 inch)	30°
L09350-3045	2	0.76mm (0.030 inch)	45°
L09350-3060	2	0.76mm (0.030 inch)	60°
L09350-3090	2	0.76mm (0.030 inch)	90°
L09276-1015	3	0.25mm (0.010 inch)	15°
L09276-1022	3	0.25mm (0.010 inch)	22°
L09276-1030	3	0.25mm (0.010 inch)	30°
L09276-1045	3	0.25mm (0.010 inch)	45°
L09276-1515	3	0.38mm (0.015 inch)	15°
L09276-1522	3	0.38mm (0.015 inch)	22°
L09276-1530	3	0.38mm (0.015 inch)	30°
L09276-1545	3	0.38mm (0.015 inch)	45°
L09276-2015	3	0.51mm (0.020 inch)	15°
L09276-2022	3	0.51mm (0.020 inch)	22°
L09276-2030	3	0.51mm (0.020 inch)	30°
L09276-2045	3	0.51mm (0.020 inch)	45°
L09276-2515	3	0.64mm (0.025 inch)	15°
L09276-2522	3	0.64mm (0.025 inch)	22°
L09276-2530	3	0.64mm (0.025 inch)	30°
L09276-2545	3	0.64mm (0.025 inch)	45°
L09276-3015	3	0.76mm (0.030 inch)	15°
L09276-3022	3	0.76mm (0.030 inch)	22°
L09276-3030	3	0.76mm (0.030 inch)	30°
L09276-3045	3	0.76mm (0.030 inch)	45°
L10382-10	4	0.25mm (0.010 inch)	all quads are
L10382-15	4	0.38mm (0.015 inch)	35° inner angle
L10382-20	4	0.51mm (0.020 inch)	76° outer angle
L10382-25	4	0.64mm (0.025 inch)	-

8.3 Nozzles, Spray (Swirl) or Extended

Part number	Orifice Diameter
101367	0.381mm (0.015 inch)
101368	0.508mm (0.020 inch)
101369	0.635mm (0.025 inch)
101370	0.787mm (0.031 inch)
101371	1.016mm (0.040 inch)
101372	1.397mm (0.055 inch)
101373	1.778mm (0.070 inch)

8.4 Optima single-orifice Modules

Part number	Orifice Diameter
109729	Optima Module, SC, ADJ, #2
109730	Optima Module, SC, ADJ, #3
109731	Optima Module, SC, ADJ, #4
109732	Optima Module, SC, ADJ, #5
109733	Optima Module, SC, ADJ, #6
109735 *	Optima Module, SC, ADJ, #8
109737	Optima Module, SC, ADJ, #10

*** The module 109735 is replaced by:**
1. ModPlus Marathon Module, PN 110639D
2. Cap nut for nozzle, PN L09219
3. Nozzle 0.025 ORF 0.075 BRL D=0,65mm, PN L19969

8.5 Spray (Swirl) Caps

Spray (swirl) models require a spray cap in addition to a nozzle.

Part number	Orifice Diameter	Angle
L18790	0.889mm (0.035inch)	15°
L18791	0.889mm (0.035inch)	20°
L18792	0.889mm (0.035inch)	25°
L18793	0.889mm (0.035inch)	30°
L18794	0.889mm (0.035inch)	35°
L18795	1.016mm (0.040inch)	15°
L18796	1.016mm (0.040inch)	20°
L18797	1.016mm (0.040inch)	25°
L18798	1.016mm (0.040inch)	30°
L18799	1.016mm (0.040inch)	35°

8.6 Filter Kits

To simplify ordering, Filter Kits are available for the 100-mesh, 150-mesh and 200-mesh filters.

Filter Kit PN	O-ring PN	Filter cap PN	Filter asy PN
114287	O-ring #019 N00186	Filter cap 101620	100-mesh 101618
114288	O-ring #019 N00186	Filter cap 101620	150-mesh 112091
114289	O-ring #019 N00186	Filter cap 101620	200-mesh 113311

8.7 Shoe Head Nozzles

Part number	Description
057B423	Nozzle .016, 8-32 THD
057B424	Nozzle .020, 8-32 THD
057B425	Nozzle .030, 8-32 THD
057B426	Nozzle .040, 8-32 THD
057B427	Nozzle .062, 8-32 THD
057B1474	Nozzle blank, 8-32 THD

8.8 Swirl Air Kits

Spray models require a swirl air kit installed on the ASU (Adhesive Supply Unit).

Number of Applicators per ASU	ASU Voltage	PN Dynamini V2 ASU	PN Dynamelt S ASU
1	120	111892	-
2	120	111893	-
1	240	111894	104903
2	240	111895	104906
1	200	n. a.	104902
2	200	n. a.	104905

8.9 Heater Cartridges

Number of Modules/ Model	200-240 VAC PN	200-240 VAC Heater cartridge	120 VAC PN	120 VAC Heater cartridge
1 Module/ BF0441	104128	Ø12.5x33mm, 220W, (240V)	104254	Ø12.5x33mm, 200W
2 Modules/ BF0442	105878	Ø12.5x33mm, 200W, (200V)	104254	Ø12.5x33mm, 200W
2 Modules/ BF0662	104249	Ø12.5x55mm, 400W	104255	Ø12.5x55mm, 240W
3 Modules/ BF0883	104250	Ø12.5x77mm, 475W	104256	Ø12.5x77mm, 320W
4 Modules/ BF0884	104250	Ø12.5x77mm, 475W	104256	Ø12.5x77mm, 320W
4 Modules/ BF1104	104251	Ø12.5x99mm, 585W	104257	Ø12.5x99mm, 360W
6 Modules/ BF1546	104252	Ø12.5x143mm, 775W	104258	Ø12.5x143mm, 500W
8 Modules/ BF1988	104253	Ø12.5x187mm, 960W	104259	Ø12.5x187mm, 600W

8.10 RTD Temperature Sensor

Controller	RTD Temperature Sensor PN	Quantity
DynaControl / Dynamini	PT100, Ø .1875X1.25L (Ø 4.76x31.75mm), N07958	1
Upgrade NOR	NI120, Ø .1875X1.25L (Ø 4.76x31.75mm), N07864	1

8.11 Nozzle Cleaning Kits

Two nozzle cleaning kits are available, sized to be orifice-specific:

Part number	Description
101877	Nozzle Cleaning Kit: 0.010 to 0.017 orifice
101878	Nozzle Cleaning Kit: 0.018 to 0.040 orifice

8.12 High Temp Heater Splice Kit PN 102645

This kit consists of a foot of shrink tube and nine connectors (splices). These parts plus a heater cartridge (order the heater separately from the chart above) will enable you to replace the heater in one module.

8.13 Replacement Module for the Standard Mod-Plus Module PN 110639

The standard Mod-Plus module (PN 110639) is a high performance module.
ITW Dynatec also offers a more economical, lower performance replacement module, PN 110638. Cycle life of the high performance module is approximately three times longer than the ITW Challenger module.

8.14 Flexible Air Line Kit for Solenoid Valve PN 111336

Kit is used to connect air solenoid valve to applicator when supplied rigid tubing is unsuitable.

8.15 Recommended Spare Part Lists

As a general rule, we recommend that you keep on hand the same quantity of following parts as listed *on the BOMs under Ch.7, the Optional Parts under Ch.8 and your order:*

- *Modules*
- *Nozzles*
- *Heaters*
- *RTDs, Temperature Sensors*
- *O-rings, Sealings*
- *Filters*
- *Kits*

8.15.1 Typical Dyna BF Mod-Plus Marathon Applicator

Item	Part number	Description	Qty
12	101620	Filter cap, BF Head	1
13	101618	Filter, 100 mesh (standard BF)	1
	113311	Filter, 200 mesh (standard Optima)	1
16	103467	**Cable Assembly for DynaControl 240V** (incl. N07958 RTD temp. sensor PT100, Ø .1875X1.25L (Ø 4.76x31.75mm)	1
	104521	**Cable Assembly for DynaControl 120V** (incl. N07958 RTD temp. sensor PT100, Ø .1875X1.25L (Ø 4.76x31.75mm)	1
	104528	**Cable Assembly for Upgrade NOR 240V** (incl. N07864 RTD temp. sensor NI120, Ø .1875X1.25L (Ø 4.76x31.75mm)	1
	115036	**Cable Assembly for Upgrade NOR 120V** (incl. N07864 RTD temp. sensor NI120, Ø .1875X1.25L (Ø 4.76x31.75mm)	1
	104127	**Cable Assembly for DynaControl 240V, Washdown** (incl. N07958 RTD temp. sensor PT100, Ø .1875X1.25L (Ø 4.76x31.75mm)	1
	104522	**Cable Assembly for DynaControl 120V, Washdown** (incl. N07958 RTD temp. sensor PT100, Ø .1875X1.25L (Ø 4.76x31.75mm)	1
	104529	Cable Assembly for Upgrade NOR 240V, Washdown (incl. N07864 RTD temp. sensor NI120, Ø .1875X1.25L (Ø 4.76x31.75mm)	1
23	104128	Heater Ø12.5x33mm, 220W, (240V) (see Options under Ch.8 Ordering Guide)	1
28	N00196	O-ring #111	1
29	N00186	O-ring #019	1
33	N00181	O-ring #014	1
34	N07958	RTD temp. sensor PT100, Ø .1875X1.25L (Ø 4.76x31.75mm) (part of Cable asy, see Options Ch.8 Ordering Guide)	1
35	N00179	O-ring #012	1

8.15.2 ModPlus Swirl Module Assembly PN 118148

Item	Part number	Description	Qty
1	118148	Module Assembly, Mod Plus Swirl (sold as an assembly only)	1
2	N00175	O-ring #008	3
9	8842	Screw Retaining O-ring	2

8.15.3 Extended Module Assembly PN 118150

Item	Part number	Description	Qty
1	118150	Extended Module Assembly (sold as an assembly only)	1
2	N00175	O-ring #008	3
5	8842	Screw Retaining O-ring	2

8.15.4 BF Head Assembly with 3 Port Shoe Nozzle, PN 802843 and BF Head Assembly with 6 Port Shoe Nozzle, PN 802844

Item	PN	Description	Qty
1	118149	Mod Plus Shoe Nozzle Module Assembly	1
13	101620	Filter cap, BF Head	1
15	101618	Filter, 100 mesh	1
18	103467	**Cable Assembly for DynaControl 240V** (incl. N07958 RTD temp. sensor PT100, Ø .1875X1.25L (Ø 4.76x31.75mm)	1
25	104128	Heater Ø12.5x33mm, 220W, (240V) (see Options under Ch.8 Ordering Guide)	1
30	N00196	O-ring #111	1
31	N00186	O-ring #019	1
33	N00181	O-ring #014	1
34	N07958	RTD temp. sensor PT100, Ø .1875X1.25L (Ø 4.76x31.75mm) (part of Cable asy, see Options Ch.8 Ordering Guide)	1
	084B1851	**Shoe Nozzle Assembly, 6 Nozzle (used with BF Head 802844)**	
37	036A016	Heater, 90W, 240V, 1/4" x 3" (Ø6.35x76.2mm)	2
	084B1852	**Shoe Nozzle Assembly, 3 Nozzle (used with BF Head 802843)**	
45	036A016	Heater, 90W, 240V, 1/4" x 3" (Ø6.35x76.2mm)	2

8.15.5 Slot Die Module Assembly, PN 118700

Item	Part number	Description	Qty
1	118699 *	Nozzle assembly, 1-inch (25.4mm), RibbonCoater	1
4	150007	ModPlus Module assembly	1
6	N00175	O-ring 008	3
7	118781	O-ring 3.5mm ID x 1.3mm wide	2
9 *	L21334	Shim blank, 1" (25.4mm), thickness .004" (0.10mm) (standard shim), (not shown)	5

* see separate drawing and BOM.

9 * NOTE:
Brass shim blanks (item 9, not shown) are supplied with every module / slot nozzle assembly.
Other shim blanks are available in following thickness:

- .003" / 0.076mm (PN L21333)
- .005" / 0.127mm (PN L21335)
- .010" / 0.254mm (PN L21336)
- .015" / 0.381mm (PN L21337)

8.15.6 Nozzle Assembly 1.0 Inch RibbonCoater, PN 118699

Item	Part number	Description	Qty
1 *	L21334	Shim blank, 1" (25.4mm), thickness .004" (0.10mm) (standard shim)	5
2	150009	O-ring 11mm	1

1 * NOTE:
Brass shim blanks (item 1) are standard shims and supplied with every module / slot nozzle assembly.
Other shim blanks are available in following thickness:

- .003" / 0.076mm (PN L21333)
- .005" / 0.127mm (PN L21335)
- .010" / 0.254mm (PN L21336)
- .015" / 0.381mm (PN L21337)

8.15.7 Blank ModPlus Module assembly, PN L18500

Item	Part number	Description	Qty
3	N00175	O-ring 008	3

8.15.8 Lubricants and Fluids

Item	PN	Description	Quantity
	001V061	Heat transfer compound, 2.0 ounce (59 ml) container	1
	001V078	High-temp lube, TFE, Krytox, 0.5kg container	1
	108700	High-temp lube, TFE Krytox, 0.25 ounce (7.4 ml) single use tube	1
	107324	Antiseize Compound, 0.5kg container	1
	001U002	Silicone lube, 5.3 ounce (157 ml) resealable tube	1
	108689	Silicone lube, 0.25 ounce (7.4 ml) single use tube (tube not resealable)	1
	N02937	Thread Sealant, 16 ounce (473 ml) container	1
	L15653	Kit, Flushing Fluid, 1 gallon (3,78 l) container	1
	117819	Thread locker, adhesive/sealant, green	1

Chapter 9
Appendix

9.1 Air Filter and Regulator Kit for Applicators, PN 100055

ITW Dynatec applicators require compressed air for needle actuation. Air Filter and Regulator Kit (PN 100055) is available to provide filter regulator, tubing and fittings for one or more applicators.

In addition to the kit, a solenoid valve with voltage that matches the output voltage of the electrical control device must be selected for the application.

Use the following chart to select an appropriate solenoid valve:

PN	Solenoid Valve / Voltage	Application
100054	4,02,1/8,MAC,HIR, **24VDC**	Single-port head, continuous or intermittent
100383	4,02,MAC,HIRS,HT, **24 VDC**	Multi-port head, continuous
100421	4,12,1/4,MAC,HIR, **120 VAC**	Single or multi-port head, continuous
100422	4,24,1/4,MAC,HIR, **240 VAC**	Single or multi-port head, continuous
108968	4,24,1/4,MAC,JB 400 SERIES, **24 VDC**	Single or multi-port head, intermittent

9.2 Installation Notes for Air Filter and Regulator Kit

1) Compressed air for applicator head operation must be clean, dry and oil free.

2) Operation of more than two applicator heads by one kit may require additional lines, tee-fittings and solenoid valves not supplied in one kit.

3) To provide identical operation of more than one head, air line circuits from solenoid valves to heads should be the same length and contain similar fittings.

4) To minimize applicator response time, minimize length of the air line circuits from the solenoid valve(s).

9.3 Pneumatic Drawing for Head Air Control

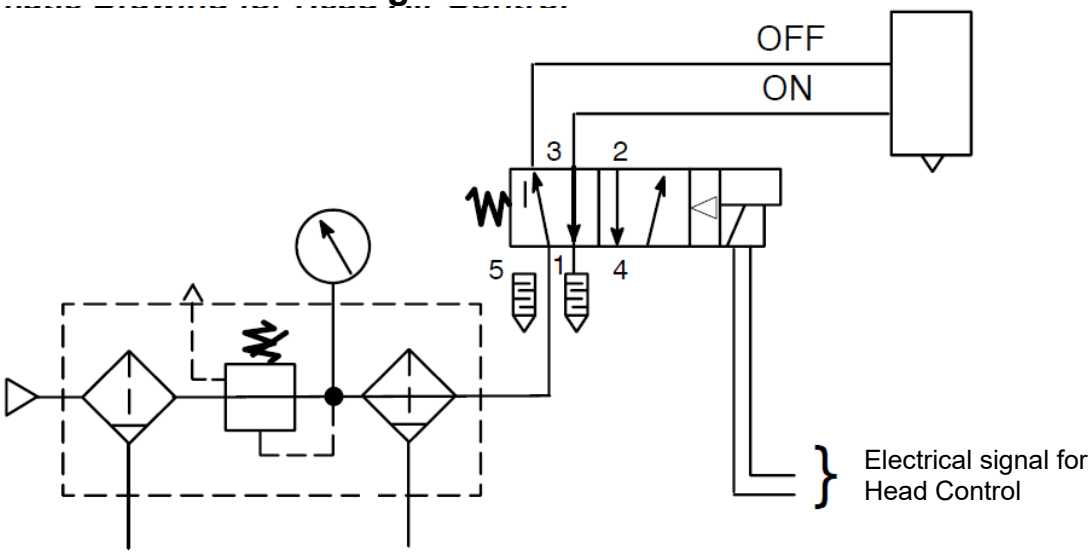

9.4 Air Filter and Regulator Kit, PN 100055

THIS DRAWING IS THE PROPERTY OF ITW/DYNATEC.
DO NOT REPRODUCE OR DISCLOSE TO
OTHERS WITHOUT EXPRESS WRITTEN
CONSENT OF ITW/DYNATEC.

DWG. NO.	SH.	REV.
100055	1	K

REVISIONS

REL.	REV.	DESCRIPTION	DATE	BY	APPROVED
02163	G	ADDED ITEM 4	10.14.02	BB	
02584	H	ITEM 5 WAS 100380	10.30.02	BB	
02640	J	CORRECT VIEW OF FILTER	1.31.03	BB	
E436	K	SHOW ITEM 14 AS SPARE; ADD NOTE 2	07.09.19	JC	

REVISIONS

REL.	REV.	DESCRIPTION	DATE	BY	APPROVED
	A	ORIGINAL RELEASE	04.22.94	CN	
	B	REQ. VALVE WAS 100041	05.10.94	CN	
	C	N06438 WAS N07677, QTY WAS 20FT 100380 WAS N02774 ITEM 6 WAS 100081 ITEM 12 WAS N01067	07.08.94	CN	
	D	1. WAS N02535 2. QTY WAS 20; 3. WAS N00754 4. WAS N02745; 5. WAS VLV, SOL 6. QTY WAS 5; 7. WAS N06412 8. WAS N06435; 9. WAS N00093 10. QTY WAS 3; 11. WAS N00092	08.26.94	CN	
	E	QTY WAS 5	01.12.95	JT	
00095	F	ITEM 14 WAS QTY 1, ADDED ITEM 3	2.10.00	BB	

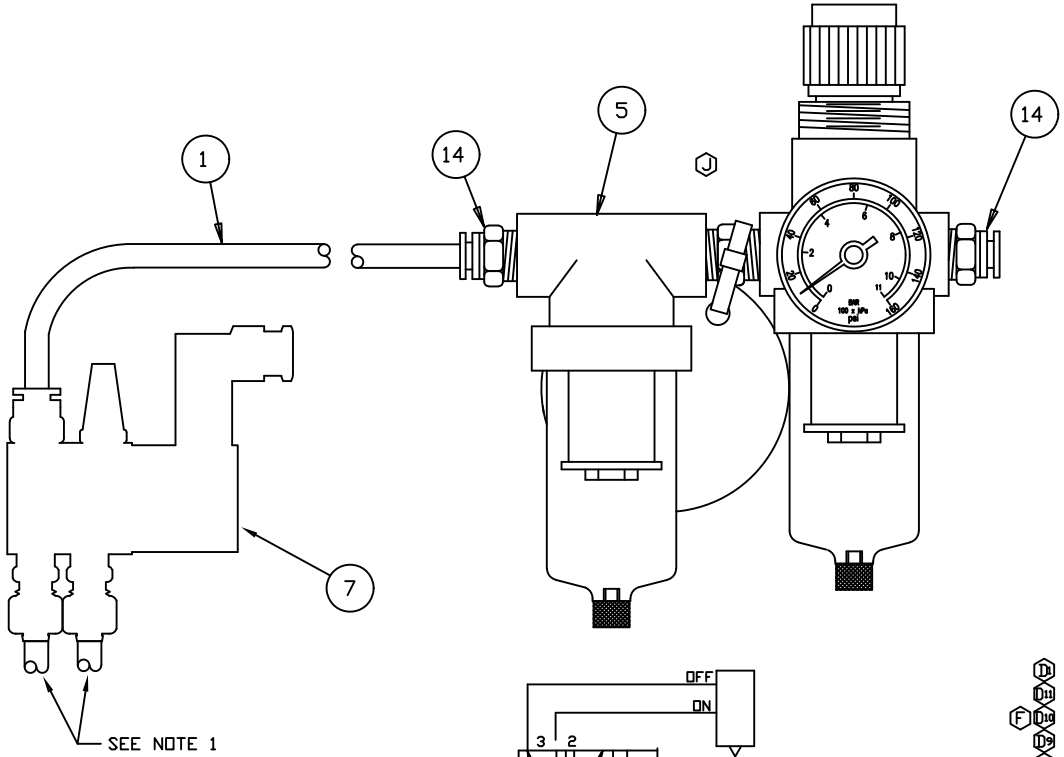

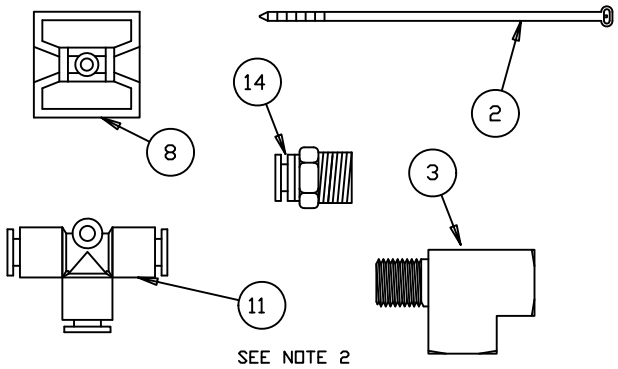

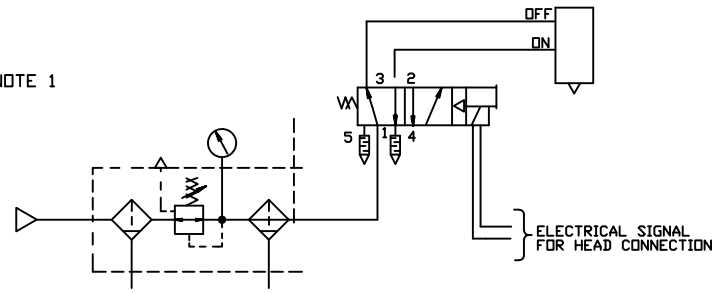

PNEUMATIC DIAGRAM FOR A-HEAD & S-HEAD CONTROL

(24VDC)

NOTE:

1. AIR LINES TO HEAD ARE TO BE CUT TO 3.5-4.0 INCHES LONG.
2. BAG ALL LOOSE ITEMS WITH FILTER/REGULATOR ASSY AND MARK WITH ITW DYNATEC PART NUMBER FOR CUSTOMER USE.

PARTS LIST

	ITEM	PART NUMBER	QTY.	U/M	DESCRIPTION
D1	16				
D11	15				
F D10	14	N06430	3	EA	FTG,CONN,M,BRS
D9	13				
C	12				
	11	N06504	1	EA	FTG,TEE,UNION,BRS,PUSH-IN
D8	10				
D7	9				
D6	8	N04264	3	EA	CABLE TIE ANCHOR, ADH BKD
D5 B	7	REQ. VALVE ASSY	1	EA	ASY,VLV,SOL
C	6				
H C	5	105610	1	EA	FLTR,ASY,A/C
G D4	4	100055-REF	1	REF	DWG ASSY INSTR
F D3	3	N04531	1	EA	FTG,TEE,STREET,#04
E D2	2	N00318	10	EA	CABLE TIE,.09X3.62 LG WYL
C	1	N06438	10	FT	TUBING,NYLON,.250D

UNLESS OTHERWISE SPECIFIED DIMENSIONS ARE IN INCHES
TOLERANCES ARE:
FRACTIONS ± DECIMALS .XX±.03 .XXX±.010 ANGLES ±.5°

FOR MACHINING STANDARDS AND SYMBOLS, SEE ITW/DYNATEC SPEC. A05800

USED ON

NEXT ASSY.

DO NOT SCALE DRAWING

APPROVALS		DATE
DRAWN	C.NEVILLS	4.22.94
CHECKED	JCZ	4.22.94
APPROVED		

ITW Dynatec
HENDERSONVILLE, TN

KIT,FILTER,COALES

U/M EA
STATUS P
SOURCE P

SIZE C | DWG. NO. 100055 | REV. K | GROUP 00

SCALE 1:1 | CAD DRAWING | SHEET 1 OF 1

THIS DRAWING IS THE PROPERTY OF ITW/DYNATEC.
DO NOT REPRODUCE OR DISCLOSE TO
OTHERS WITHOUT EXPRESS WRITTEN
CONSENT OF ITW/DYNATEC.

REVISIONS

REV	DATE	DESCRIPTION	REF DOC	BY
A	2.26.98	ORIGINAL RELEASE	N97062	JCZ
B	4.10.02	ITEM 2 WAS 105607	02196	BB
C	10.30.02	DELETED ITEMS 4–9, REVISED NOTES	02584	BB
D	10.14.09	ITEM 3 WAS 048J008	09290	BB
E	26JUL19	NOTE 1 DETAILED FLUSH PLUG INSTALL, NO LONGER NECESSARY	ECN 471	ALM

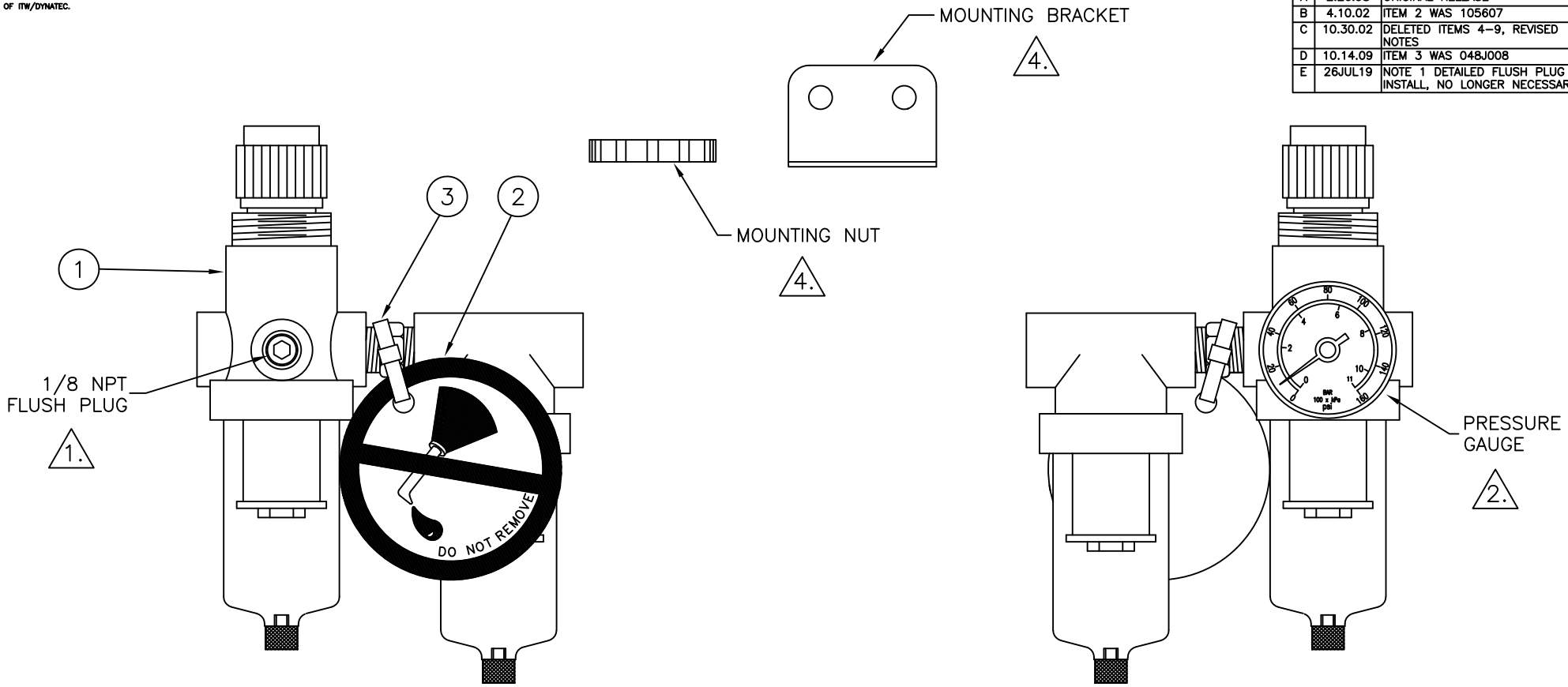

BACK VIEW

FRONT VIEW

E NOTES:

1.

2. INSTALL GAUGE WITH FACE ORIENTATION AS SHOWN. PLACE TEFLON TAPE ON THREADS PRIOR TO ASSEMBLY.

3. ATTACH THE "DO NOT OIL" TAG (ITEM 2) TO THE FILTER/REGULATOR ASSY USING THE CABLE TIE (ITEM 3).

4. MOUNTING NUT AND BRACKET ARE SUPPLIED WITH FILTER/REGULATOR ASSY (ITEM 1) AND MAY OR MAY NOT BE USED ON ASSEMBLY LINE. IF NOT USED, BAG WITH FILTER/REGULATOR ASSY AND MARK WITH ITW DYNATEC PART NUMBER FOR CUSTOMER USE.

PARTS LIST

ITEM	PART NUMBER	QTY	U/M	DESCRIPTION
3	N00318	1	EA	CABLE TIE,.09X3.62 LG WY
2	103053	1	EA	TAG,OIL FREE
1	100380	1	EA	FLTR/REG ASY,COALESCING

UNLESS OTHERWISE SPECIFIED DIMENSIONS ARE IN INCHES
TOLERANCES ARE:
FRACTIONS ± DECIMALS .XX±.03 .XXX±.010 ANGLES ±.5

FOR MACHINING STANDARDS AND SYMBOLS, SEE ITW/DYNATEC SPEC. A05800

USED ON: DYNAMELT & DYNAMINI

NEXT ASSY.: —

DO NOT SCALE DRAWING

APPROVALS		DATE
DRAWN	JCZ	2.26.98
CHECKED	JCZ	2.26.98

COMPUTER DESCRIPTION(24 CHARACTERS): FLTR/REG AS,DMS/DMIN

ITW Dynatec HENDERSONVILLE, TN

U/M: EA

FILTER/REGULATOR ASSEMBLY

STATUS: A

SOURCE: G

SIZE: C | DWG. NO.: 105610 | REV.: E | GROUP: 20

SCALE 1:1 | CAD DRAWING | SHEET 1 of 1

DWG. NO.	SHT.	REV.
100380	1	C

REVISIONS

REL.	REV.	DESCRIPTION	DATE	BY	APPROVED
02584	C	REVISED AND REDRAWN	10.30.02	BB	

THIS DRAWING IS THE PROPERTY OF ITW/DYNATEC.
DO NOT REPRODUCE OR DISCLOSE TO
OTHERS WITHOUT EXPRESS WRITTEN
CONSENT OF ITW/DYNATEC.

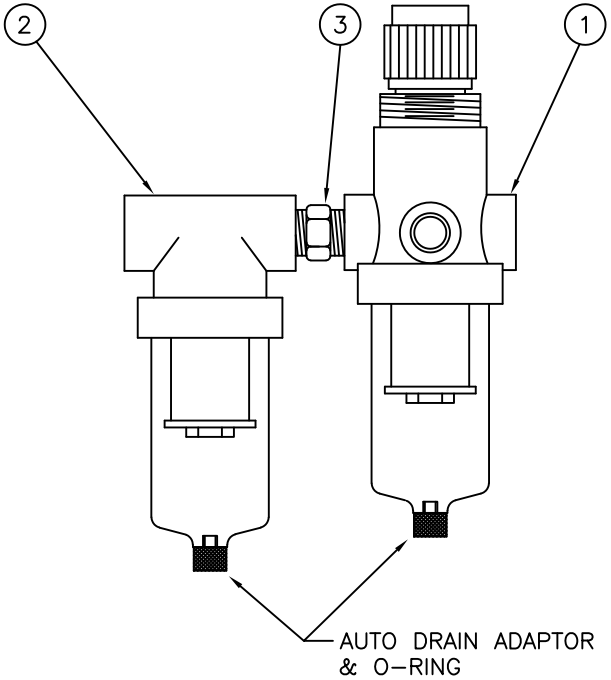

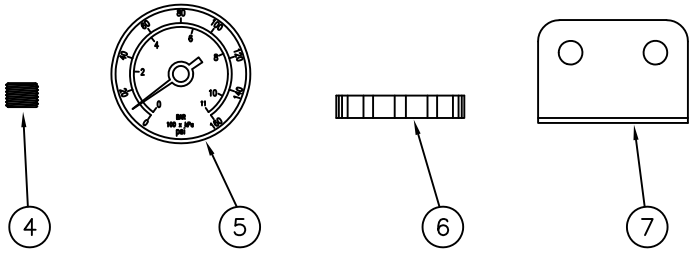

ITEM	PART NUMBER	QTY.	U/M	DESCRIPTION
7	–	1	EA	BRACKET, MOUNTING
6	–	1	EA	NUT, MOUNTING
5	–	1	EA	GAUGE, PRESSURE
4	–	1	EA	PLUG, FLUSH, 1/8 NPT
3	072X228	1	EA	FITTING, PIPE NIPPLE, 1/4 NPT
2	100081	1	EA	FILTER, COALESCING, 1/4 NPT
1	N02774	1	EA	FILTER/REGULATOR, 1/4 NPT

PARTS LIST

NOTES:

1. VENDOR: FLUID POWER; VENDOR P/N CQ491
2. ITEMS 4–7 ARE SUPPLIED UNASSEMBLED AND BAGGED WITH THE FILTER/REGULATOR ASSEMBLY.

UNLESS OTHERWISE SPECIFIED DIMENSIONS ARE IN INCHES
TOLERANCES ARE:
FRACTIONS ± | DECIMALS .XX±.010 .XXX±.005 | ANGLES ±.5

USED ON

NEXT ASSY. 105610

DO NOT SCALE DRAWING

FOR MACHINING STANDARDS AND SYMBOLS, SEE ITW/DYNATEC SPEC. A05800

APPROVALS		DATE
DRAWN	BB	10.30.02
CHECKED		

COMPUTER DESCRIPTION(24 CHARACTERS)
FLTR/REG ASY,COALESCING

ITW Dynatec
HENDERSONVILLE, TN

FILTER/REGULATOR ASSEMBLY, COALESCING

U/M: EA
STATUS: P
SOURCE:
GROUP:

SIZE: B | DWG. NO. 100380 | REV C
SCALE 1:1 | CAD DRAWING | SHEET 1 of 1

Revisions

Revision	Page/Ch.	Description
Rev.1118	Ch.7	Specifications updated according to PLS 2017.
Rev.1.20	Ch.8	The module 109735 is replaced by: 1. ModPlus Marathon Module, PN 110639D 2. Cap nut for nozzle, PN L09219 3. Nozzle 0.025 ORF 0.075 BRL D=0,65mm, PN L19969
Rev.1.22	-	New manual layout.
Rev.7.23	1	Manual language added.
	Ch.8.4	Ring color column removed.
Rev.7.24	Ch.7.8	ModPlus Module for Shoe-Nozzle, PN 118149, added.

ITW Dynatec Service Parts and Technical Service:

AMERICAS	EUROPE, MIDDLE EAST & AFRICA	ASIA PACIFIC	
ITW Dynatec 31 Volunteer Drive Hendersonville, TN 37075 USA Tel. +1.615.824.3634 info@itwdynatec.com service@itwdynatec.com	ITW Dynatec Industriestrasse 28 40822 Mettmann Germany Tel. +49.2104.915.0 info@itwdynatec.de service@itwdynatec.de	ITW Dynatec No. 2 Anzhi Street, SIP, Suzhou, 215122 China Tel. +86.512.6289.0620 info@itwdynatec.cn service@itwdynatec.cn	ITW Dynatec Tsukimura Building 5th Floor 26-11, Nishikamata 7-chome Ota-ku, Tokyo 144-0051, Japan Tel. +81.3.5703.5501 info@itwdynatec.co.jp service@itwdynatec.co.jp